Series **AL**

AL 400

Operating instructions

Before transporting and using the machine, please read the instructions thoroughly!

Seriové číslo / Serien Nummer / Serial Number _____

Service and information

Your BOMAR dealer:

Direct BOMAR contact:		
BOMAR spol. s r.o. Těžební 1236/1 62700 Brno Czech Republic, EU	telefon: fax: e-mail: www:	+420 – 533 426 100 +420 – 533 426 109 info@bomar.cz http://www.bomar.cz
We are available:		
Mondays to Fridays	7^{00} – 16^{00}	
Version:		
1.05 / Sep. 2011 rev. 1		

BOMAR, spol. s r.o. © – Subject to modifications and amendments.

EC Declaration of Conformity

1) We

BOMAR, spol. s r.o.
Těžební 1236/1
627 00 Brno, The Czech Republic
Id.no: 48908827

declare herewith,

that the following designated device based on its conception and construction as well as the design launched by us meets the relevant basic safety requirements of the decrees of the government. In the event of any device modification not approved by us this declaration shall lose its validity.

Name: **Circular Saw**

Type range: **AL 400 Semi-automat**

Serial number: **.....**

Manufacturer: **BOMAR, spol. s r.o., Těžební 1236/1, 627 00 Brno**

Product data:
Determination: for cross dividing and cutting of bars and profiles made of aluminum, plastics, copper and its alloys with angle cut from -60° (L60°) to +90°(R90°)

Description:
stand, table, cutting unit with the saw blade and drive, microniser , Pneumatic-hydraulic unit, Microniser, el. switch board with control panel., safety covers, safety elemensts

Technical data: blade speed 50.m.s^{-1}, cutting angle -60°+90°
Total dimensions in mm (l × w × h) 1000 × 2200 × 1450,
Supply voltage 3×400V, total power requirement 3,8 kW, weight 190 kg

The applied decrees of governments: **No. 17/2003 Coll.** (Directive 73/23/EEC)
No. 616/2006 Coll. (Directive 2004/108/EC)
No. 17/2003 Coll. (Directive 2006/95/EC)

The applied harmonized standards,
National standards and technical specifications: ČSN EN ISO 12 100-2:2004, ČSN EN 13 898 + A1:2009, ČSN EN ISO 13857:2008, ČSN EN 982 + A1:2008, ČSN EN 61000-6-2 ed.3:2006, ČSN EN 61000-6-4 ed.2:2007, ČSN EN 60204-1 ed.2:2007

The product is safe on condition of the common and determined usage.

The conformity judging was performed according to §12, par. 3, let. a), of the Law no. 22/1997 Coll. as amended
2) [2] The declaration of conformity was carried out in the cooperation with the TÜV CZ s.r.o., Novodvorská 994, 142 21 Prague 4 – Czech Republic, Identification number: 63987121 - Inspection body no. 4002

The inspection certificate no . 02.099.898/10/07/02/0 was issued.

BOMAR, spol. s r.o.
Těžební 1236/1, 627 00 Brno
Czech Republic
IČO: 48908827
DIČ: CZ48908827

Brno, 2. 11. 2010 Alfred Pichlmann, Managing Director

Point of issue, datum	Name and function of the responsible subject	Signature
---	---	---

1] Name, address and identification number of the subject issuing the conformity declaration (producer of importer)
2) The authorized or accredited body co-operating on the conformity judging

!	If the equipment is installed without safety equipment offered by BOMAR, spol. s ro or its agents and used by the customer (or buyer) then EC declaration loses validity. EC Declaration of conformity is valid only if customer (buyer) installed the BOMAR safety equipment with the machine or with some other with equivalent safety device in accordance with current applicable regulations and standards. All machine elements and components that were built into the device by BOMAR, spol. s ro have been declared "identical" to a safety device, as offered by BOMAR, spol. s ro or its agents.

Content

1. SAFETY NOTES 7

1.1. Machine determination 9
1.2. Protective suit and personal safety 9
1.3. Safety notes for machine operator 10
1.4. Safety machine accessories 11
1.4.1. Total Stop 11
1.4.2. Workplace cover 11
1.4.3. Pedestal door 11
1.5. Umístění štítku stroje / Maschinenschild position / Position of machine label 12
1.6. Umístění bezpečnostních značek / Verteilung der Sicherheitszeichen / Position of safety symbols 13

2. MACHINE DOCUMENTATION 15

2.1. Technická data / Technische Daten / Technical data 17
2.2. Řezné rozsahy / Schnittbereiche / Cutting sizes 18
2.3. Rozměrové schéma / Aufstellzeichnung / Installation diagram 19
2.4. Popis / Beschreibung / Description 20
2.5. Transportation and stocking 21
2.5.1. Conditions for transportation and stocking 21
2.5.2. Transport and stocking preparations 21
2.5.3. Transport and stocking 21
2.5.4. Transportní schéma / Transport schema / Transport scheme 22
2.6. Activation 23
2.6.1. Machine working conditions 23
2.7. Band saw unpacking and assembling 23
2.7.1. Machine installing and levelling 23
2.7.2. Machine disposal after lifetime 23
2.7.3. Kotevní plan / Verankerungsplan / Grounding plan 24
2.8. Electrical connection 25
2.8.1. Check the running direction of the cutting wheel 25
2.9. Connecting to the compressed air supply 25
2.10. Filling of the cooling system 26
2.11. Check machine function 26
2.12. Saw blade 26
2.12.1. Saw blade size 26
2.12.2. Selection of the saw disk 26

3. MACHINE CONTROL 27

3.1. Starting the saw 29
3.2. Control panel 29
3.3. Machine contro 29
3.3.1. Semi-automatic operationl 29
3.3.2. Signal light 30
3.3.3. Cycle breaking 30
3.4. Circular saw adjusting 31
3.4.1. Set of clamping cylinders 31
3.4.2. Jaw console setting 31
3.4.3. Angular cut setting 32
3.4.4. Clamping adjusting 32
3.4.5. Speed adjusting of the arm lowering 34
3.5. Exhausting device (optional accessories) 34
3.6. Material insertion 34
3.6.1. Handling agent selection 35
3.6.2. Insertion 35

4. MACHINE SERVICE 36

4.1. Saw disk dismantling 38
4.2. Saw disk installation 38
4.3. Cooling agents and chips disposal 39
4.3.1. Cooling liquid inspection 39
4.3.2. Chips disposal 39
4.4. Hydraulic, Greases and oils 39
4.4.1. Lubricant greases 39
4.4.2. Lubrication 40
4.4.3. Hydraulic oils 40
4.4.4. Hydraulic oil level check 41
4.5. Pressure system servicing 41
4.6. Machine cleaning 41
4.7. Worn pieces replacement 42
4.7.1. Belt replacement 42

5. SCHÉMATA / SCHEMAS / SCHEMATICS 44

5.1. Elektrické schema / Elektroschema / Wiring diagrams 45
5.2. Pneumaticko-hydraulické schéma / Pneumatik-Hydraulikschema / Pneumatic-Hydraulic diagram 49

6. VÝKRESY SESTAV PRO OBJEDNÁNÍ NÁHRADNÍCH DÍLŮ / ZEICHNUNGEN FÜR BESTELLUNG DER ERSATZTEILE / DRAWING ASSEMBLIES FOR SPARE PARTS ORDER 52

6.1. AL 400 53
6.2. Kusovník / Stückliste / Piece list – AL 400 54
6.3. Rameno / Sägerahmen / Saw arm - 1 55
6.4. Kusovník / Stückliste / Piece list – Rameno / Sägerahmen / Saw arm - 1 56
6.5. Rameno / Sägerahmen / Saw arm - 2 57
6.6. Kusovník / Stückliste / Piece list – Rameno / Sägerahmen / Saw arm - 2 58
6.7. Podstavec / Untersatz / Base 59
6.8. Kusovník / Stückliste / Piece list – Podstavec / Untersatz / Base 60
6.9. Kryt / Cover / Abdeckung 61
6.10. Kusovník / Stückliste / Piece list – Kryt / Cover / Abdeckung 62
6.11. Stůl / Table / Tisch 63
6.12. Kusovník / Stückliste / Piece list – Stůl / Table / Tisch 64
6.13. Válec / Zylinder / Cylinder 65
6.14. Kusovník / Stückliste / Piece list – Válec zvedací / Hebezylinder / Lifting cylinder 66
6.15. Válec upínací / Spannzylinder / Fixing cylinder 1 67
6.16. Kusovník / Stückliste / Piece list – Válec upínací / Spannzylinder / Fixing cylinder 1 68
6.17. Válec upínací / Spannzylinder / Fixing cylinder 2 69
6.18. Kusovník / Stückliste / Piece list – Válec upínací / Spannzylinder / Fixing cylinder 2 70
6.19. Vana / Wanne / Tank 71
6.20. Kusovník / Stückliste / Piece list – Vana / Wanne / Tank 72
6.21. Rozvaděč / Verteiler / Distributor 73
6.22. Kusovník / Stückliste / Piece list – Rozvaděč / Verteiler / Distributor 74
6.23. Upínání horní / Spannvorrichtung oben / Top clamping 75
6.24. Kusovník / Stückliste / Piece list – Upínání horní / Spannvorrichtung oben / Top clamping 76
6.25. Konzola / Konsole / Console 77
6.26. Klíč / Schlüssel / Key 78
6.27. Díl připojovací /Anschlussteil / Attachment part 79

1. Safety notes

The operating instructions must be read by the person, who keeps in touch with the machine before transportation, installation, using, servicing, reparation, stocking or removal!

The operating instructions include relevant information. The operator must familiarise himself with the install and operation, safety notes and machine servicing, because reliability and service life must be reached. The operating instructions must avoid risks, which are linked to work on the machine. Before transporting and using of the machine, please read the instructions thoroughly!

Attention!
The operating instructions must be available at the machine!
Keep the operating instructions in good condition!

1.1. Machine determination

The band saw **AL 400** is determined for cross dividing and cutting of bars and profiles made of aluminum, plastics, copper and its alloys with angle cut from -60° (L60°) to +90°(R90°)

Combustible materials are excepted for cutting! Any other usage and operation outside this range are unauthorized and the manufacturer/supplier does not accept any responsibility for any damages resulting from such misuse. **The operator has full responsibility!**

The machine is equipped with safety and protective guarding for operator and machine protection. Nevertheless, this safety and protective guarding cannot prevent injury. Service personnel must read this chapter and comprehend it, before he starts to work on the machine. **Always keep instructions about work safety!** Service personnel must take into account other aspects of the risk, which refer to the ambient conditions and the material.

Attention!
Consider the safety signs on the machine. Do not remove or damage them!

1.2. Protective suit and personal safety

Wear tight fitting overalls! Loose fitting clothes may be caught with machine parts and cause serious injury.

Wear protective gloves! Material cuts and saw band have sharp edges and may cause serious injuries.

Attention!
Gloves you can use only at working material replacement (saw band)! The machine and accessories must be inactive!
If the machine is running, you must not wear gloves! It is dangerous, because some parts of the machine can catch gloves!

Wear protective shoes with non-skid soles! The unsuitable shoes may cause balance loss and following injury. Falling work pieces may cause serious injuries too.

Wear protective goggles! Chips and cooling liquid may damage your eyes.

Always wear ear protections! Most of the machines emit up to 80 dB and may damage your hearing.

Do not wear jewellery and always tie back long hair! Moving machine parts can catch jewellery or loose hair and may cause serious injuries.

Operate the machine only when you are fit enough to work. Illnesses or injuries diminish concentration. Avoid machine work, which may compromise the safety of you and your colleagues!

1.3. Safety notes for machine operator

Attention!
Machine can be operated by person older than 18 years!
Machine can be operated only person physically and mentally fit for this activity

Machine can be operated only by one person. Machine operator is responsible for presence of other persons by the machine.

Keep instructions and orders about work safety!
Read the operating instructions, before you start to work on the machine! Keep the operating instructions in good condition!

Close covers before the machine starting and check, if the covers are not damaged. Damaged covers must be repaired or changed. Do not start the machine, if the cover is removed! Check, if the electric cables are not damaged.

Attention!
Do not connect the machine to electricity if the covers are removed. Do not touch the electrical equipment.

- Do not hold the material for clamping to the vice and for cutting!
- Do not operate with the buttons and the switches on the control panel, when you have gloves!
- For machine starting take care, that there is nobody in the working area of the machine (it means in the working area of the vice, the saw band, the saw arm etc.).
- In no circumstances touch the rotating elements.
- Work on the machine only when the machine is in good condition!
- Check at least once in a shift, if the machine is not damaged. If the machine is damaged, you must bring the machine in order and you must inform your superior!
- Keep your working area clean! Ensure sufficient lighting in the working area.
- Take off the spilt water or the oil from the floor and dry it. Do not touch the cooling liquid with bare hands! Do not set the nozzle of the cooling liquid, when the machine is started on
- Do not remove the chips from the working area of the machine, when the machine is started on!
- Do not use the compressed air for the machine cleaning or for the chips removing!
- Use the protective instruments for chips removal!
- Safety notes for the servicing and repairs

WARNING!
After switching off the machine, the blade will still rotate for at least one minute. ***Opening the door in this time is not allowed and can cause serious injuries!***
fatal consequences! Always keep notes about work safety!
Otherwise, there is possibility of heavy injury!

Switch off the main switch and lock it, before you start service work! Otherwise, there is possibility of hazardous machine starting.

Only qualified person can do the servicing and repairs. For parts changing, use only parts, which are identical with the originals. Otherwise, there is possibility of health hazard. Use only recommended type of the hydraulic oils and oils and lubricants!

Do not remove or do not lock the limit switches or safety equipments! Any use of the saw, accessories or machine parts other than that intended by the BOMAR, spol. s r.o. company is not permitted. The guarantee on this product will be afterward lost and BOMAR, spol. s r.o. takes no responsibility for caused damages.

Attention!
Only a qualified professional can carry out the servicing and repairs of the electric equipment! Take special care during the work with electrical equipment. High voltage shock can have fatal consequences! Always keep notes about work safety! Otherwise, there is possibility of heavy injury!

1.4. Safety machine accessories

The machine is equipped with safety accessories. It protects the operator from injuries and the machine before damage. The safety accessories are blocking accessories, emergency switches and covers. Check once in a week the function of the safety accessories. If the safety accessories are functionless, you must stop work and repair or change the safety accessories.

Enhanced risk!
Do not come into or intervene in the cutting area. Otherwise, there is possibility of heavy injury.

1.4.1. Total Stop

TOTAL STOP button is used for emergency switching – off the machine in case defect or health hazard. By pressing **TOTAL STOP** button is interrupted the supply of the electrical power.

If any damages or fault appears, immediately press TOTAL STOP button! Release the pressing button is possible by twisting of the upper part of the button.

1.4.2. Workplace cover

The cover is locked during operation**. Do not dismount safety cover.**

The band saw is stated to the operation, when the covers is closed!

1.4.3. Pedestal door

WARNING!
After switching off the machine, the blade will still rotate for at least one minute. ***Opening the door in this time is not allowed and can cause serious injuries!***

Doors are secured with a lock. After cutting, machine is unlocked after about 50 sec.

The saw is stated to the operation, when the cover is closed!

1.5. Umístění štítku stroje / Maschinenschild position / Position of machine label

Machine label is located at the rear of saw pedestal.

1.6. Umístění bezpečnostních značek / Verteilung der Sicherheitszeichen / Position of safety symbols

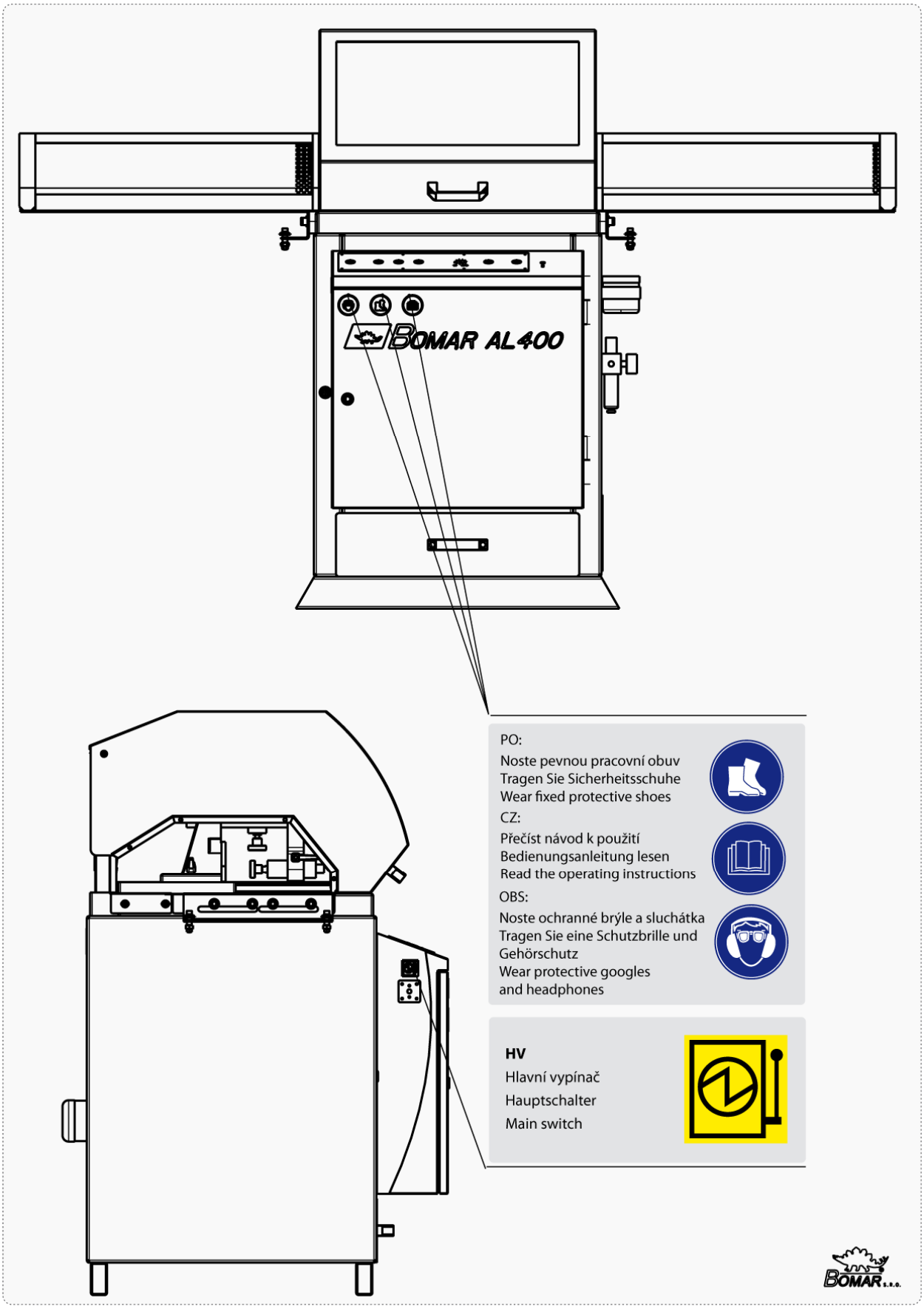

2. Machine documentation

2.1. Technická data / Technische Daten / Technical data

Hmotnost stroje / Maschinengewicht / Machine weight:	
• Hmotnost / Gewicht / Weight	190 kg
Rozměry stroje / Maschinengröße / Machine size :	
• Délka / Länge / Lenght	1000 mm
• Šířka / Breite / Width	2200 mm
• Výška / Höhe / Height	1450 mm / 1850 mm
Elektrické vybavení / Elektrische Ausrüstung / Electical equipment:	
• Napájení / Versorgungsspannun / Supply voltage	~3 x 400 V (230 V), 50Hz, TN-C-S/TN-C (dep. on saw ver.)
• Příkon / Gesamptschlusswert / Total Input	3,8 kW
• Max.jištění / Max. Vorschaltsicherung / Max. Fuse	16 A
• Krytí / Schutzart / Protection	IP 54
Akustický tlak / Schalldruckpegel / Acoustic pressure:	
• AL 400	L_{Aeqv} = 76,3 dB
Pohon / Atrieb / Drive:	
• Typ / Typ / Type	1LA 7166 – 2AA10
• Výkon / Leistung / Output	3,0 kW
Pneum-Hydraulické zařízení / Pneumatik-Hydraulikeinrichtung / Pneum-Hydraulic equipment:	
• Typ / Typ / Type	k115-100
Rozměr pásu / Sägebanddimension / Band size:	
Ø400 × Ø30 × 3,6 mm	
Řezná rychlost / Schnittgeschwindigkeit / Cutting speed:	
50 m/s	

Řezné rozsahy / Schnittbereiche / Cutting size:

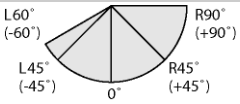

	○	▭	▯	□
L60° (-60°)	Ø96 mm	100×55 mm	45×125 mm	85×85 mm
0° (jaws infront)	Ø120 mm	220×25 mm	90×125 mm	110×110 mm
0° (jaws back)	Ø90 mm	285×70 mm	285×70 mm	70×70 mm
R45° (+45°)	Ø120 mm	150×40 mm	65×125 mm	100×100 mm
R60° (+60°)	Ø96 mm	100×55 mm	45×125 mm	85×85 mm

Level of acoustic pressure:

Equivalent level of acoustic pressure A (noise) at operator position are L_{Aeqv}=76,3 dB. Mentioned values are levels of emission which doesn't have to represent safe levels. Factors which influence real level of acoustic pressure on machine operator are: working place characteristics, cut material, saw band. These factors have significantly influence on acoustic pressure.

2.2. Řezné rozsahy / Schnittbereiche / Cutting sizes

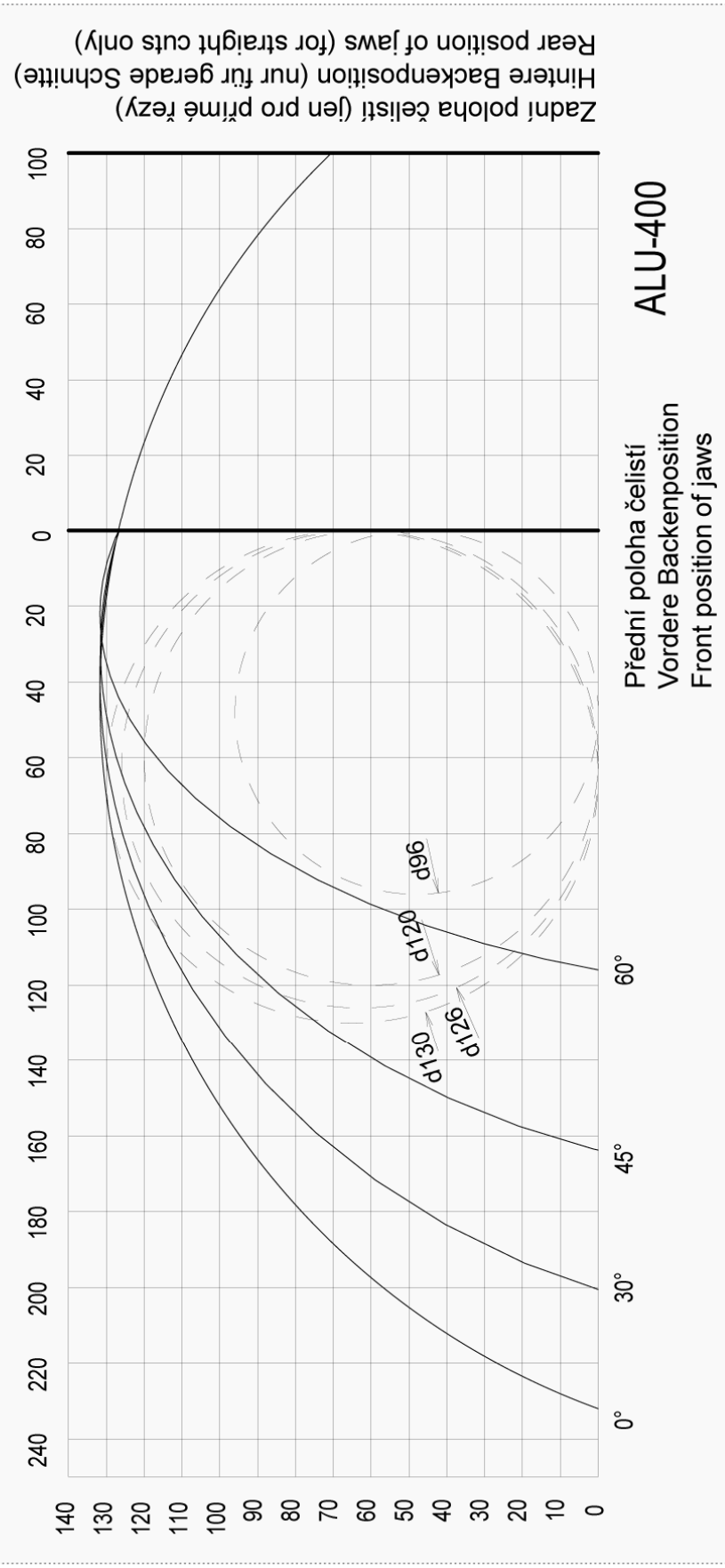

Manual version: 1.05 / Sep. 2011
Manual rev.: 1

2.3. Rozměrové schéma / Aufstellzeichnung / Installation diagram

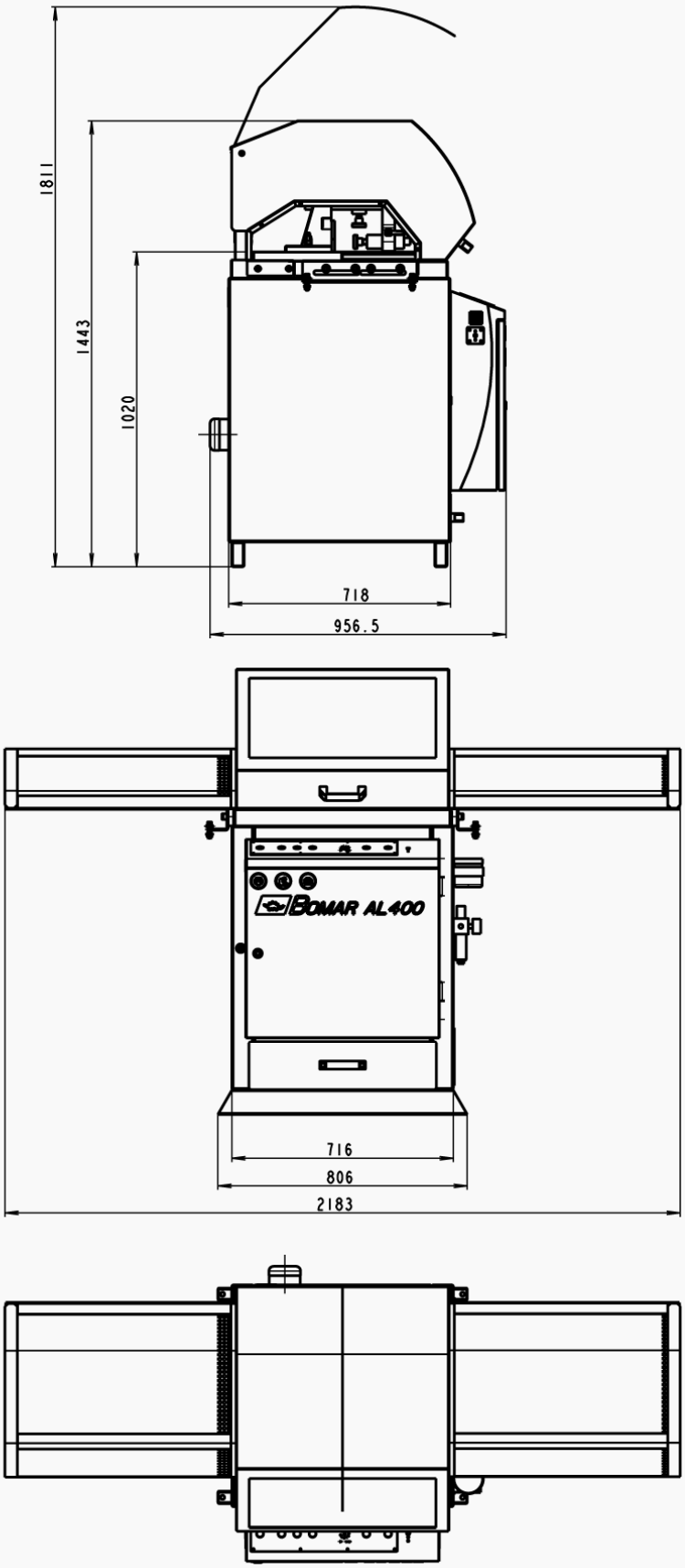

2.4. Popis / Beschreibung / Description

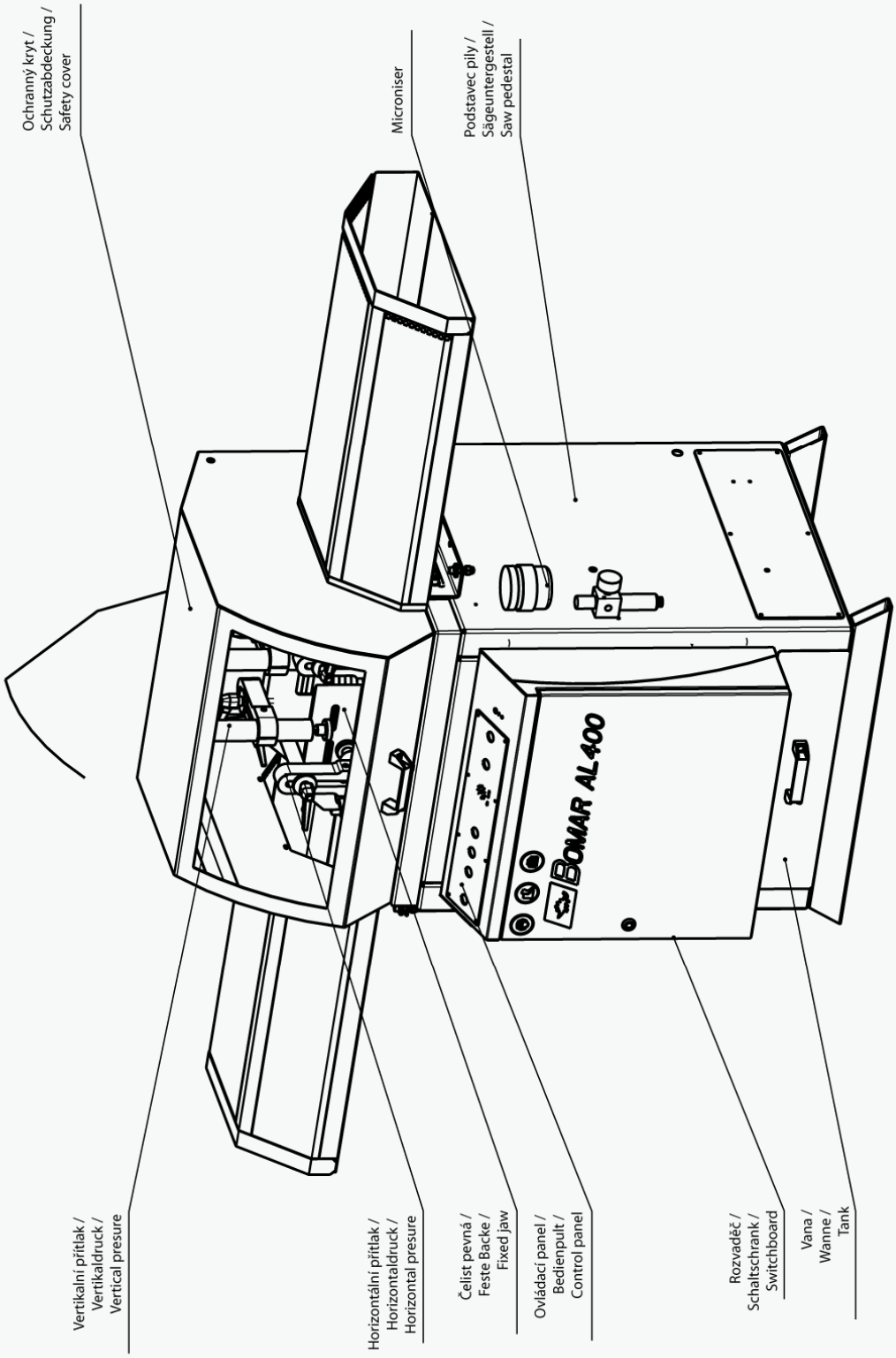

2.5. Transportation and stocking

2.5.1. Conditions for transportation and stocking

Keep recommendations for the manufacturers for transportation and stocking! If the recommendations are not kept, damage can occur to the machine.

- Don't use a forklift truck for handling the machine, if you do not have license for it!
- Don't move under suspended loads! Fault in lifting device may cause serious injury. Keep a safe distance from the machine during the transport.
- Temperature of the air from *-25°C to 55°C*, for a *short term* (max. 24 hours) temperature of the air until *70°C*
- Do not expose the machine to radiation (for example microwave radiation, ultraviolet radiation, laser radiation, x-ray radiation). Radiation can cause problems with the machine function and deteriorating condition of the isolation.
- Take measures, to prevent damage by dampness, by vibrations and by shakes.

2.5.2. Transport and stocking preparations

- Close the vice and thoroughly oil all blank surfaces.
- Lower the saw frame to the lowest position.
- Fasten all loose parts securely to the machine.
- Pack and wrap the control desk securely to avoid damage during transport.

Fix the stickers stating the minimum approximate machine weight to at least five well visible places.

2.5.3. Transport and stocking

Handle the machine only with the hand pallet truck or the forklift truck! If the machine is equipped with the shackles in the pedestal, you can use the suspension cable and the crane.

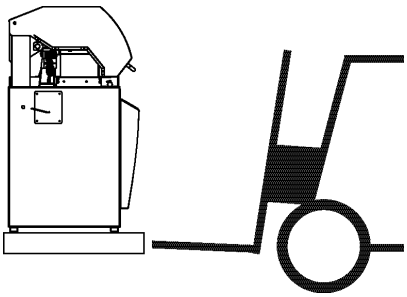

- Make sure that the hand pallet truck; the forklift truck or the crane had sufficient capacity.
- Make sure that the van or the trailer had sufficient capacity.
- The machine must be secured during transportation.
- Screw on the palette to the floor of the van or the trailer.
- Be careful that the machine is not damaged during transportation.

It is forbidden to handle the machine any other way, than it is written in this operating instructions, the machine can be damaged!

2.5.4. Transportní schéma / Transport schema / Transport scheme

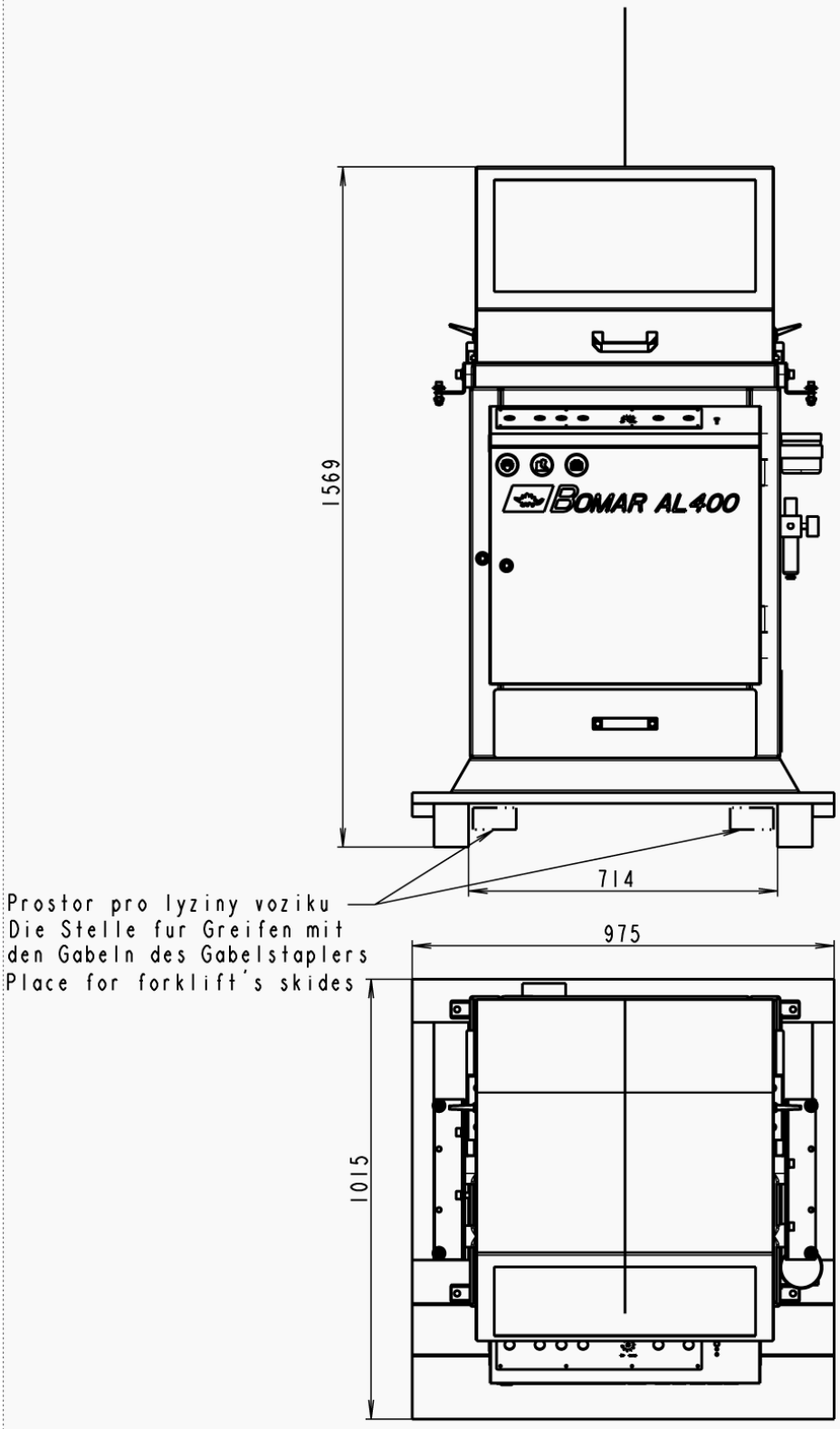

2.6. Activation

2.6.1. Machine working conditions

Keep the conditions of the manufacturer for machine operating! If recommendations are not kept, damage can occur to the machine.

The manufacturer warrants the correct function of the machine for these conditions:

- At temperature air from ***5°C to 40°C***, the temperature average during 24 hours must ***not exceed over 35°C***.
- At relative dampness of the air in the extend from 30% to 95% (not concentrate)
- Altitude lower than 1000 metres.
- Do not expose the machine to the radiation (for example microwave radiation, ultra-violet radiation, laser radiation, x-ray radiation). Radiation can cause problems with the machine function and deteriorating condition of the isolation.

2.7. Band saw unpacking and assembling

Remove the packing from the machine and unpack all parts.

Attention!
Switch off the main switch and lock it, before you start assembly! Otherwise, there is possibility of hazardous machine starting.

2.7.1. Machine installing and levelling

Check the floor supporting capacity before machine installing. If the floor capacity does not agree with requirements, you must prepare the necessary base for the machine.

Minimal requirement:

machine weight – AL 400 – 190 kg

+ weight of accessories

+ maximum weight of material

- The machine must be levelled at the horizontal position. All feet of the machine must touch with the floor after levelling
- The machine must be levelled by means of the calibrated spirit level. Spirit level is put on the vice area. Set the roller conveyors according to the spirit level.
- For machine levelling, take care that there is sufficient available space for operation, repair work, servicing of the machine and handling the material..
- The machine including appended parts and accessories must be visible from the place of operation.

2.7.2. Machine disposal after lifetime

Blown out all service fluids (cooling liquid, hydraulic oil) into designated reservoir. Dismantle machine into separate parts and dispose them in accordance with valid directives.

2.7.3. Kotevní plan / Verankerungsplan / Grounding plan

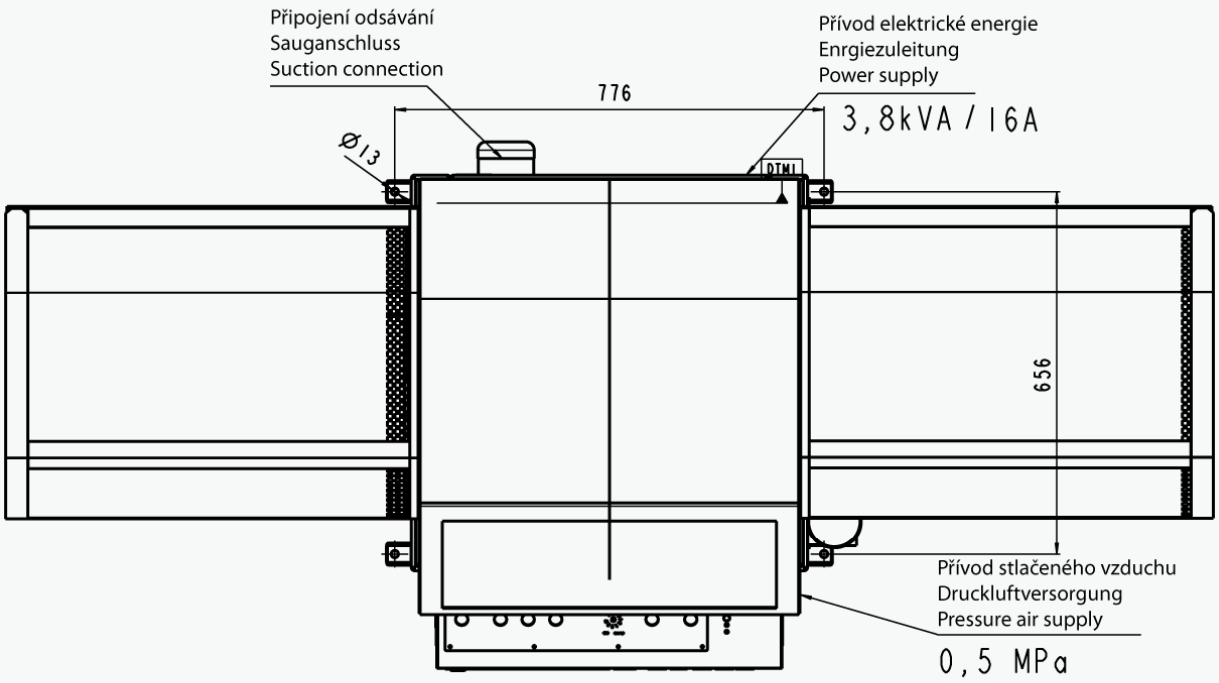

Kotvící materiál / Verankerungsmaterial / Grouding material

- ***4×*** Hmoždina / Dübel / Plug – ***ø12 mm***
- Vrtáno do hloubky / In die Tiefe gebohrt / Drilled to – ***120 mm***
- Šrouby / Schraube / Screws – ***4× M10***

Šrouby podložit deskami o min. rozměrech P10×100-100
- Die Schrauben mit Platten mit Minimaldimensionen P10×100-100 unterlegen
Screew must be bottomed with plates (min. dimensions P10×100-100)

Požadavky na rovinnost podlahy / Anforderungen an die Bodenebenheit / Requirements for floor flatness

± 10 mm / 1 m

2.8. Electrical connection

Attention!
Only a qualified professional must carry out the servicing and repairs of the electric equipment! *Take special care during work with electrical equipment. High voltage shock can have fatal consequences! Always keep notes about work safety.*

Electrical parameters of the machine:

- Service voltage: ~3 x 400 V (230 V), 50Hz, TN-C-S/TN-C (dep. on saw ver.)
- Total input / Max. fuse: 3,8 kW / 16 A

Before connecting switch off the main switch of the power supply circuit for the machine and ensure dry place when doing connecting works!

Note:
The values of the crosscut of the conductor and the rated current are in the norms.

Service voltage must agree with the line voltage! Crosscut of the supply line must respond with rated current for max. machine load.

Note:
The socket with the fork can be used only at the machines with the rated current less than 16 A and total input less than 3 kW.

In case the machine is connected with a direct connection, an extra main switch must be added which can be locked in zero position.

Attention!
In this case the extra main switch becomes primary and the main switch on the machine has only secondary function.

2.8.1. Check the running direction of the cutting wheel

After the machine has been successfully connected, briefly switch on the machine and put the driving engine of the cutting wheel in the running position. The direction must be in accordance with the arrow direction on the picture. In case the direction of the cutting wheel does not match, two phases at the terminal strip must be switched.

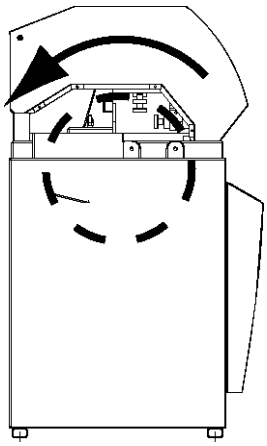

2.9. Connecting to the compressed air supply

Connect the machine to the compressed air supply by means of the screw **G1/4** on the manifold period according to the picture.

Compressed air must satisfy conditions:

- Roughly cleaned and partly dry.
- pmin = 0,4 MPa
- pmax = 0,6 MPa

2.10. Filling of the cooling system

Note:
If the machine is equipped with Microniser, fill the Microniser container with prescribed cooling agent. Now is Microniser ready for operation.

2.11. Check machine function

Before starting the check machine functions, you must read the chapter „**Machine operation**". Do not carry out check machine functions, if you do not comprehend meaning of all buttons and all machine functions.

Check, if the machine or some parts of the machine were not damaged during transport.

Check, if covers are installed and functional.

Switch on the main switch and check the motors and systems (saw disk drive etc.).

Open and close the vice. Turn the saw frame from one outer position to other outer position. Raise the frame to the top position and drop the frame to the lowest position.

Carry one cycle of cutting without material. Check, if the machine runs with no irregularities. If all machine functions are right, the machine is ready for operation.

2.12. Saw blade

Refit the saw band cover only after you have installed and tightened the saw band.

2.12.1. Saw blade size

Ø400 × Ø30 × 3,6 mm

The maximum cutting range of the machine is reached by using diving disk with recommended diameter. The usable qualities of the machine are lowered by using diving disk with fewer diameter.

Usage of the dividing disk with fewer diameter than 350 mm is not recommended!

2.12.2. Selection of the saw disk

The circular disk is possible to equip with dividing disks according to the material character and requirements on the quality of cut.

Look at the recommendation of your supplier when selecting the suitable dividing disk.

Note: *The machine is supplied without the saw disk.*

3. Machine control

3.1. Starting the saw

» • Switch on the main switch of the band saw. The main switch is situated on the side of the switchboard.

3.2. Control panel

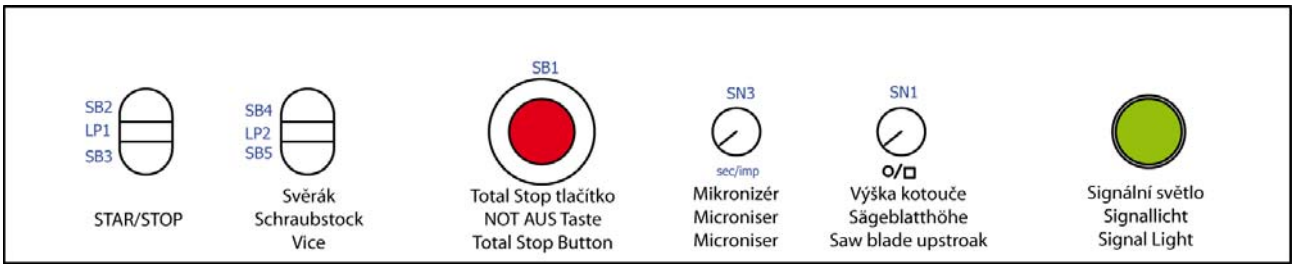

SB1	**TOTAL - STOP** In case of emergency, the machine is stated to the order!
SB2 **SB3**	**START / STOP** Press to start or stop machine working cycle.
SB4 **SB5**	**Clamp / open vice**
SN3	**Microniser** Adjust the time between the two potions (injections) of cooling liquid (1-10 seconds). When the time between the two potions is shorter, the cooling is more intensive.
SN1	**Adjusting wheel** Turn to set the height of the circular-saw blade according to the profile of the cutting material.
	Control valve (not shown on picture) It adjusts the shift speed of the disk to the cut. **Notice:** If you keep closing the throttle valve too tightly, the valve seat may wear off which causes its leakage. Therefore, close the valve always gently.

3.3. Machine contro

3.3.1. Semi-automatic operationl

1. Adjust the desired cutting angle.
2. Insert profile with the cover open.
3. Adjust height of circular blade with SN1 according of cutted profile

4. Set the clamping cylinder closest to the material (recommended value is 20 mm). If the clamping cylinders are further away from the material, the clamping takes longer.
5. Press and hold the button SB4 (clamping vice) for material clamping (the saw cover is still open). For security reasons, clamping pressure is limited, when is safety cover opened.
6. Close the saw cover.
7. Press button START (SB2) to start cutting cycle. When is START button pressed material is clamped with full pressure.
8. The cycle is completed after cutting, saw cover is unlocked and materiál is released from vice.
9. Remove the material and the whole working cycle can be repeated.

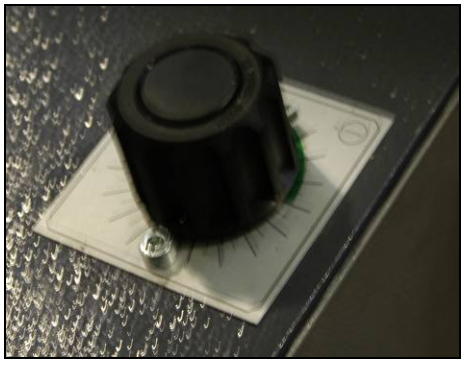

Desired speed lifting arm to cut set by Control valve.

3.3.2. Signal light

- ***Green*** – upper cover unlocked
- ***Red*** – upper cover locked
- ***Red blinking*** – FAILURE (engine heat protection, opened covers, opened doors, Total Stop button)

3.3.3. Cycle breaking

The cycle can be stopped by 2 ways:

- Release both buttons **Cutting** (**1**) and press **STOP** button (button **5** – control panel) – the saw interrupts the actual cut, the saw arm lifts to the starting position and the saw disk drive stops.
- Press emergency button **TOTAL STOP** (button 3 – control panel) in emergency causes! The safety circuit is broken and the saw disk drive is stopped too.

3.4. Circular saw adjusting

3.4.1. Set of clamping cylinders

Security hole at maximum retract the rod.

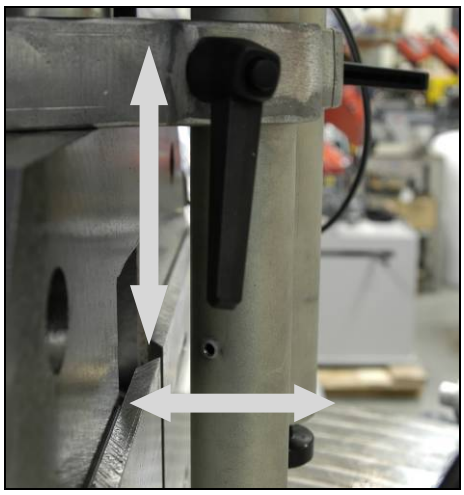

- When adjusting the height of the cylinder bore, the hole must be directed from the service. When removing the cylinder bore must be directed into the groove clamp.
- Material can be clamped main cylinder or two cylinders. Main clamping cylinder with a pressure switch (left from the perspective of the machine service)
- The cylinder can be adjusted from 20 mm to 100 mm from the cut material!
- If no possible clamping of the material at the maximum protrusion of clamping cylinders,not to run the operating cycle.

Attention!
If the main cylinder to clamp the material being cut off (eg. the table) can be runcycle.

3.4.2. Jaw console setting

Normally, the jaw console is situated in the front position. At cutting with 0° angle, the cutting range can be increased by shifting with console to the back.

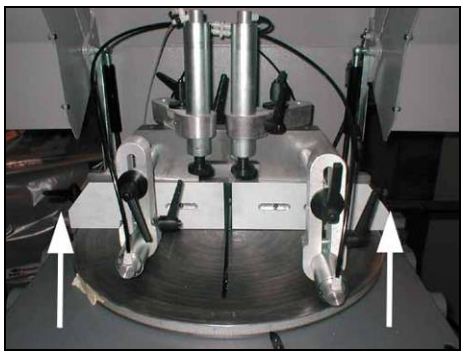

1. Loosen the tightening levers of the console.
2. Move the jaw console as far as the rear stops.
3. Tighten the securing levers of the jaw console.

ATTENTION! *At angular cuts, console with jaws must be situated in front!*

***ATTENTION!** With chips colector device installed on table, the cut angle can be varied from -60° to 60°.*

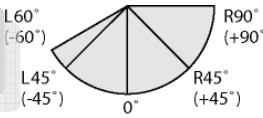

3.4.3. Angular cut setting

The cut angle can be varied from **-60° (L60°)** to **+90° (R90°)**.

***ATTENTION!** At angular cuts, console with jaws must be situated in front!*

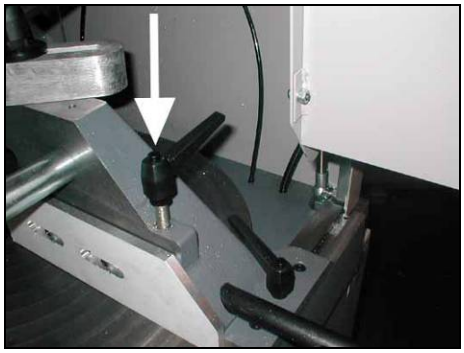

1. Release the securing lever of the turning console and adjust the desired cutting angle according to the scale.

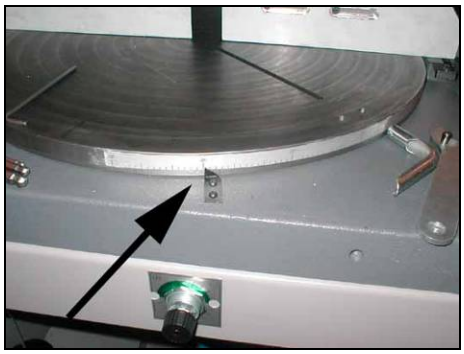

2. The scale is situated on the side of the turning console. Tighten again the securing levers of the turning console.

3.4.4. Clamping adjusting

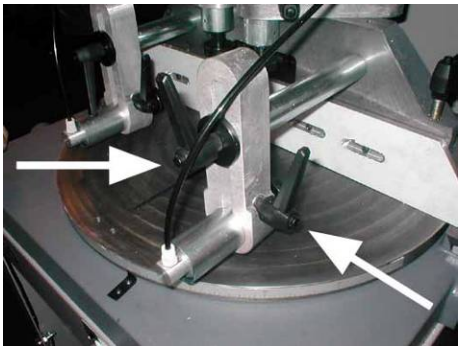

1. Release the securing lever of the clamping cylinder.

2. Shift the clamping cylinder. The clamping vice must be situated about 10 mm from the material.

3. Tighten again the securing lever.

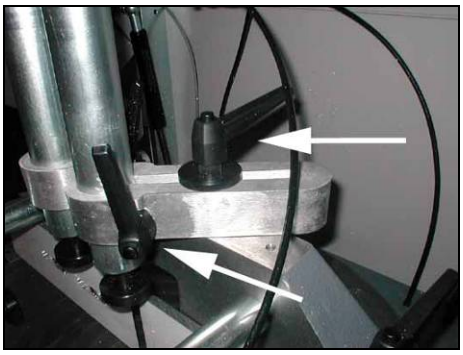

4. Adjust all four clamping cylinders.

3.4.5. Speed adjusting of the arm lowering

Set the speed of the arm lowering to the cut by control valve (position 7 – control panel).

- Set the **lower** speed of the arm lowering to the cut by turning the switch **clockwise**.
- Set the **higher** speed of the arm lowering to the cut by turning the switch **anti-clockwise**.

Notice: *If you keep closing the throttle valve too tightly, the valve seat may wear off which causes its leakage. Therefore, close the valve always gently.*

3.5. Exhausting device (optional accessories)

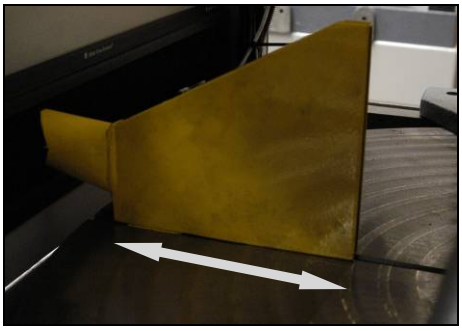

If is chips colector installed on saw table is necessary move it in according to the setting of saw blade stroke (saw blade strok eis set by SN1 on control panel).

- Big saw blade stroke – chips colector to move the most backward
- Low blade stroke – chips colector to move the most forward
- With chips colector device installed on table, the cut angle can be varied from -60° to 60°.

3.6. Material insertion

- Never walk under a suspended load!
- Never climb onto the gravity-roller conveyor!
- Do not hold the material for clamping material to the vice! The vice can cause injury!

3.6.1. Handling agent selection

- Use the strong handling agents to lift and transfer the material!
- Handle with the material only with the lift truck or use the suspension strands and the crane!
- Do not use the lift truck or crane in case that you do not have the license to handle with it!

3.6.2. Insertion

Insert material to the vice and ensure that the material cannot move in the vice or fall from the vice after the clamping. If you cut long pieces of the material (for example rod, tube), you must use the roller conveyors for material shifting to the band saw. Contact Bomar for more information about roller conveyors

Make sure the conveyor is long enough and the material cannot tip off the conveyor.

Be especially careful with round materials that it always stays on two vertical rollers and that it cannot fall off the conveyor!

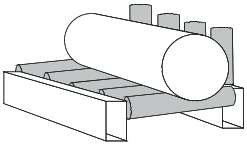

4. Machine service

4.1. Saw disk dismantling

WARNING!
After switching off the machine, the blade will still rotate for at least one minute. ***Opening the door in this time is not allowed and can cause serious injuries!***
Doors are secured with a lock. Approximately 50 s after the last cutting machine doors are unlocked. The machine must be connected to the network and turned on

1. Wait for the door unlock and open it. Saw is switch ON.
2. Switch the main switch off.

3. If your saw has exhausting device installed, before removing saw blade, remove exhausting device from blade. Dismount plastic screw.

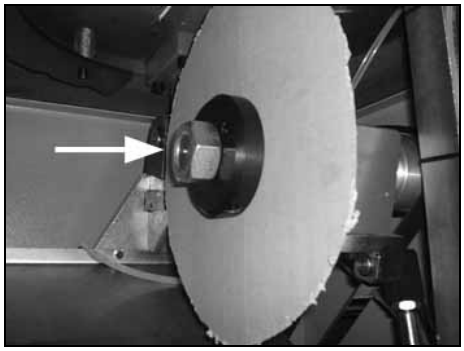

4. Loose the nut, get off the washer and the saw disk.

4.2. Saw disk installation

1. Prior to installation, clean the shaft thoroughly of all traces of chips and dirt. Keep in mind ***the teeth direction when installing the saw disk.***
2. Put on the saw disk and the washer. Tighten the nut fast.
3. Close the door at the pedestal.
4. Switch the main switch on. The circular saw is set up.

4.3. Cooling agents and chips disposal

The quality of the cooling agent will deteriorate due to:	If the solution is too weak:	If the solution is too strong:
• use of contaminated water • impurity • outside oil contamination (hydraulics, gears) • high operating temperatures • lack of air circulation • wrong concentration	• corrosion protection is diminished • lubrication decreases • microbial attack is more likely	• the cooling ability is decreased • foam behaviour increases • emulsions stability deteriorates • sticky residue develops

4.3.1. Cooling liquid inspection

Check the state of the cooling liquid periodically. Keep notes in chapter **Cooling agents and chips removal** for state checking and cooling liquid filling.

If the cooling liquid is little in the tank, it can cause the damage of the saw disk by influence of insufficient cooling.

The excess liquid can overflow from the tank on the floor, the service worker can slide and he can injure.

4.3.2. Chips disposal

Chips resulting from cutting operations must be disposed of in accordance with the relevant regulations.

- Let the chips drip excess fluid!.
- Fill a watertight container with the chips! Be careful that the container does not leak, because even after a long dripping time, they still contain coolant residue.
- *Place the container into the care of a disposal company equipped for the disposal of chips contaminated with cooling liquid.* In case the machine is equipped with micro-spray installation, the chips must also be handed over to a disposal company.

4.4. Hydraulic, Greases and oils

4.4.1. Lubricant greases

We recommend using lithium based saponified grease, class NGLI-2 for lubrication. Different greases are mixable, if their oil bases and consistence type are identical.

Comparative table of the lubricant greases:

Manufacturer	Type of the lubricant grease
BP	Energrease LS - EP
DEA	Paragon EP1
Esso	FETT EGL 3144
	Beacon EP 1
	Beacon EP 2
FINA	FINA LICAL M12
Klüber	Microlube GB0
	Staburags NBU8EP
	Isoflex Spezial
Optimol	Optimol Longtime PD 0, PD1, PD2
Shell Aseol AG	ASEOL Litea EP 806-077
Texaco	Multifak EP1

4.4.2. Lubrication

There are several placing on the machine, which are necessary to grease periodically. It secures the right function of the machine.

Lubrication place	Lubrication
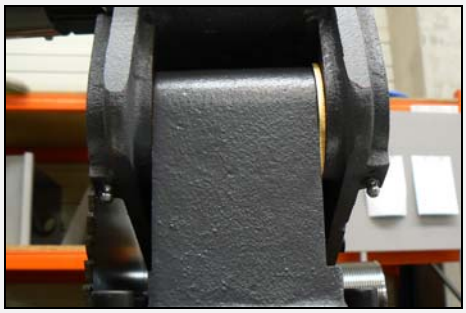	Concole of the saw arm – lubricate with grease once per month (see chapter **Lubricant greases**). Use 3-5g grease on the every carriage of the linear guiding. Use the grease gun to the lubrication. Drive 3-5 times whole line of the linear guiding during lubrication.

4.4.3. Hydraulic oils

Replace the hydraulic oil once in 2 years, because the oil can deteriorate its properties and cause problems the hydraulic equipment. If the hydraulic system is equipped with filter (2SF 56/48-0,063), replace the filter too.

Use oils with specification DIN 51524-HLP, ISO 6743-4 and viscosity grade ISO VG 46 in hydraulic aggregates. Hydraulic oils quantity – see chapter **Hydraulic oil level check**.

Note:
When replacing, use oils recommended by BOMAR or oils, which has comparable parameters from the other manufacturers. Do not forget, that mineral and synthetic oils may not be mixed!

Comparative table of the hydraulic oils

Manufacturer	Type	Manufacturer	Type
Agip	Oso 46	Ina	Hidraol 46 HD
Aral	Vitam GF 46	Klüber	Lamora HLP 46
Avia	Avilub RSL 46	Hungary	Hidrokomol P 46
Benzina	OH-HM 46	Mobil	Mobil DTE 25
BP	Energol HLP 46	ÖMV	HLP 46
Bulgaria	MX-M/46	Poland	Hydrol 30
Castrol	Hyspin AWS 46	Rumania	H 46 EP
Čepro	Mogul HM 46	Russia	IGP 30
DEA	Astron HLP 4hy6	Shell	Tellus Oil 46
Elf	Elfolna 46	Sun	Sunvis 846 WR
Esso	Nuto H 46	Texaco	Rando HD B 46
Fam	HD 5040	Valvoline	Ultramax AW 46
Fina	Hydran 46		

4.4.4. Hydraulic oil level check

Open the door at the pedestal and check the state of the oil. The oil level must be situated between marks **min** and **max**.

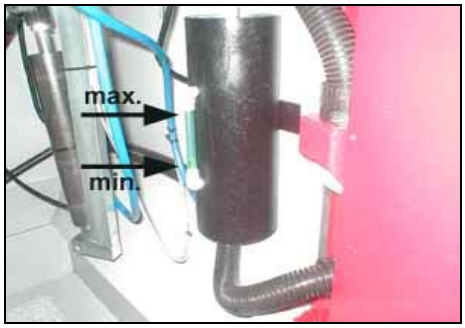

Fill the hydraulic oil, if it is necessary. Use always the filter (10 μm or better) when you fill the oil. You avoid impurities penetration to the hydraulic system and troubles in hydraulic system.

4.5. Pressure system servicing

Filter of the pressure system is necessary to clean periodically, that means drain sediments and impurities from the reservoir.

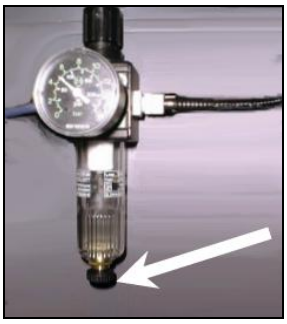

Screw off the screw and let to drain sediments to the reservoir. Screw on the screw again.

WARNING!
There is a pressure 0,5 – 0,6 MPa in the system, therefore you must release the screw very carefully!

4.6. Machine cleaning

Clean the machine from the cooling liquid and impurities after every shift stopping. Conserve the guiding surfaces, mainly:

- Clamping jaws of the vice.
- The guiding of the jaws´ console.
- Loading surface and area in the pedestal.

4.7. Worn pieces replacement

4.7.1. Belt replacement

1. Switch off the machine main switch.
2. Open the door on the pedestal.

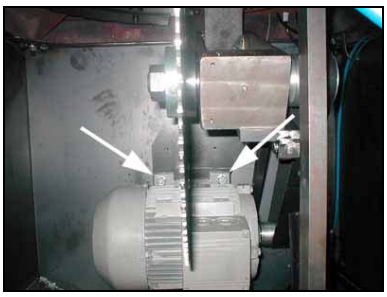
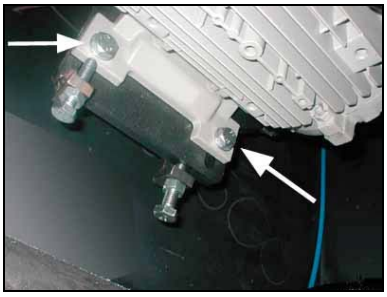

3. Release 4 screws, which holds the electromotor.

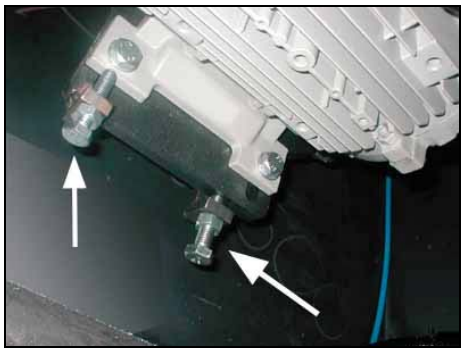

4. Release nuts of the stretching screws and screw off both screws, until the belt is not released.

5. Remove wormed driving belt and put on the new.

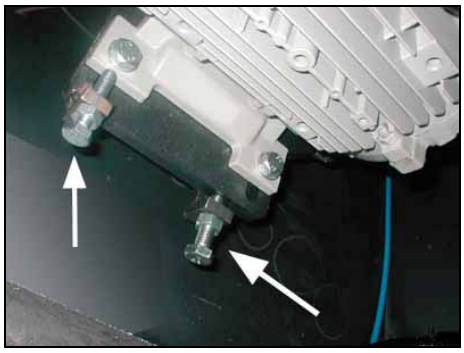

6. Stretch the driving belt by means of the stretching screws and tighten nuts of the stretching screws again.

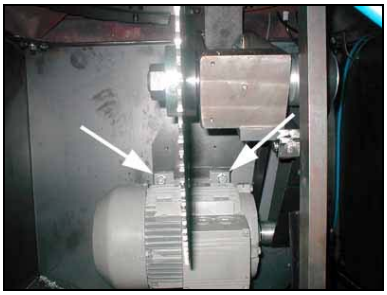

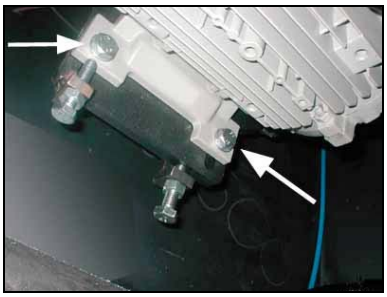

7. Tighten 4 screws, which holds electromotor.

8. Close the door on the pedestal and switch on the main switch. Belt replacement is finished.

5. Schémata / Schemas / Schematics

5.1. Elektrické schema / Elektroschema / Wiring diagrams

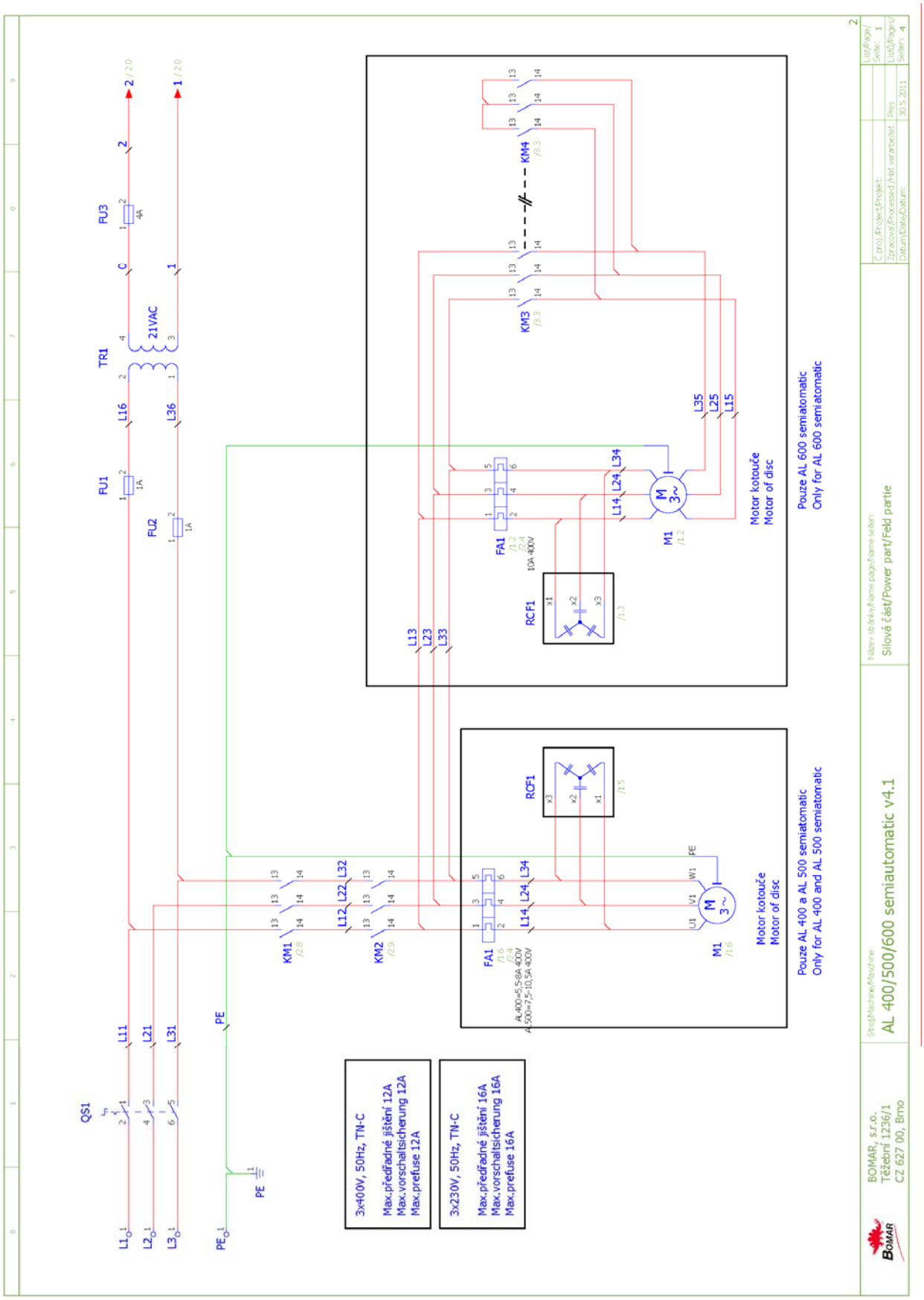

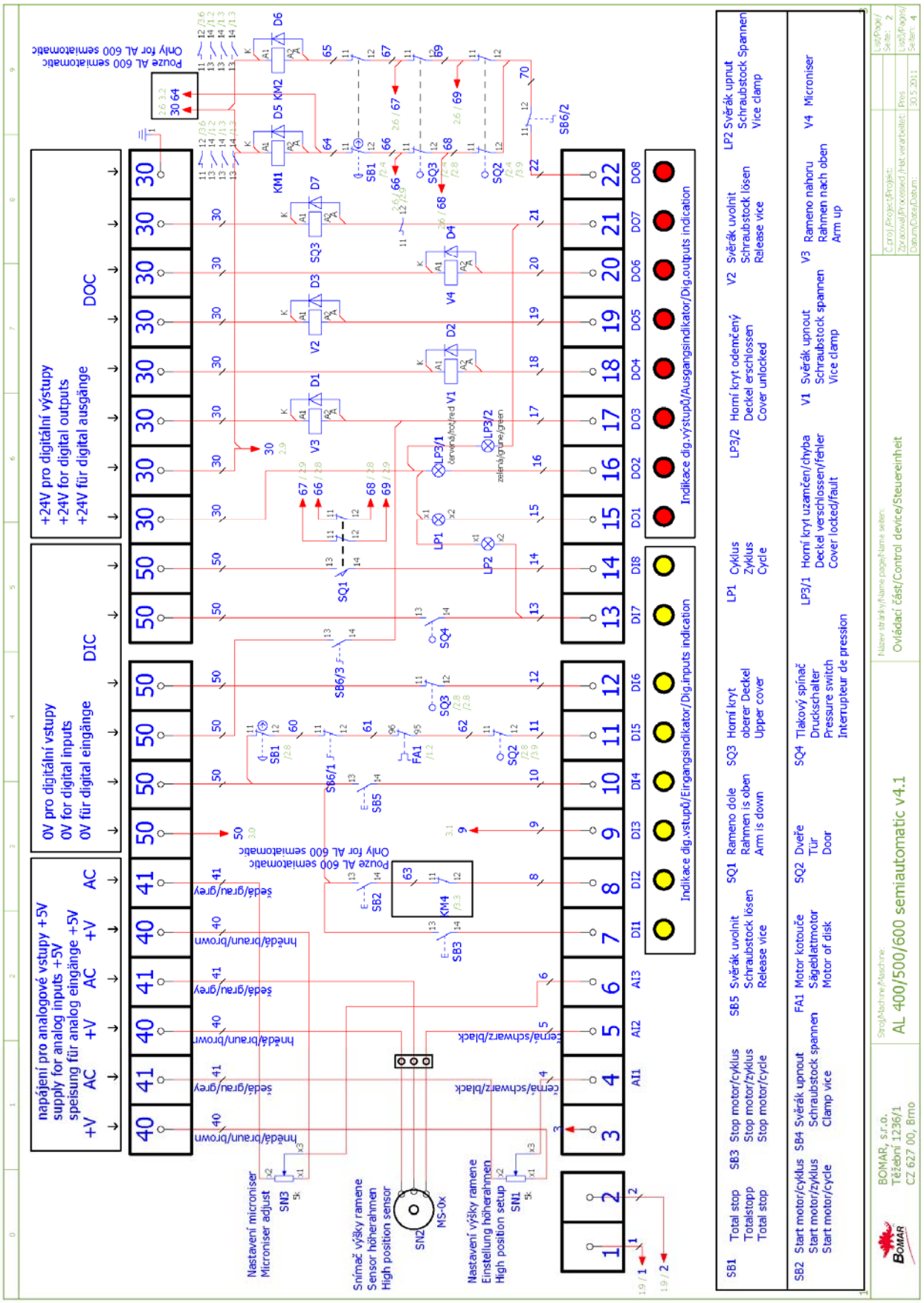
napájení pro analogové vstupy +5V
supply for analog inputs +5V
speisung für analog eingänge +5V
0V pro digitální vstupy
0V for digital inputs
0V für digital eingänge
DIC
+24V pro digitální výstupy
+24V for digital outputs
+24V für digital ausgänge
DOC
Only for AL 600 semiautomatic
Pouze AL 600 semiautomatic
Indikace dig.vstupů/Eingangsindikator/Dig.inputs indication
Indikace dig.výstupů/Ausgangsindikator/Dig.outputs indication
Nastavení microniser
Microniser adjust
Snímač výšky ramene
Sensor höherahmen
High position sensor
Nastavení výšky ramene
Einstellung höherahmen
High position setup
SB1 Total stop / Totalstopp / Total stop
SB2 Start motor/cyklus / Start motor/zyklus / Start motor/cycle
SB3 Stop motor/cyklus / Stop motor/zyklus / Stop motor/cycle
SB4 Svěrák upnout / Schraubstock spannen / Clamp vice
SB5 Svěrák uvolnit / Schraubstock lösen / Release vice
FA1 Motor kotouče / Sägeblattmotor / Motor of disk
SQ1 Rameno dole / Rahmen is oben / Arm is down
SQ2 Dveře / Tür / Door
SQ3 Horní kryt / oberer Deckel / Upper cover
SQ4 Tlakový spínač / Druckschalter / Pressure switch / Interrupteur de pression
LP1 Cyklus / Zyklus / Cycle
LP3/1 Horní kryt uzamčen/chyba / Deckel verschlossen/Fehler / Cover locked/fault
LP3/2 Horní kryt odemčený / Deckel erschlossen / Cover unlocked
V1 Svěrák upnout / Schraubstock spannen / Vice clamp
V2 Svěrák uvolnit / Schraubstock lösen / Release vice
V3 Rameno nahoru / Rahmen nach oben / Arm up
V4 Microniser
LP2 Svěrák upnut / Schraubstock Spannen / Vice clamp
BOMAR, s.r.o.
Těžební 1236/1
CZ 627 00, Brno
Stroj/Machine/Maschine:
AL 400/500/600 semiautomatic v4.1
Ovládací část/Control device/Steuereinheit
Název stránky/Name page/Name seiten:
Datum/Date/Datum: 30.5.2011

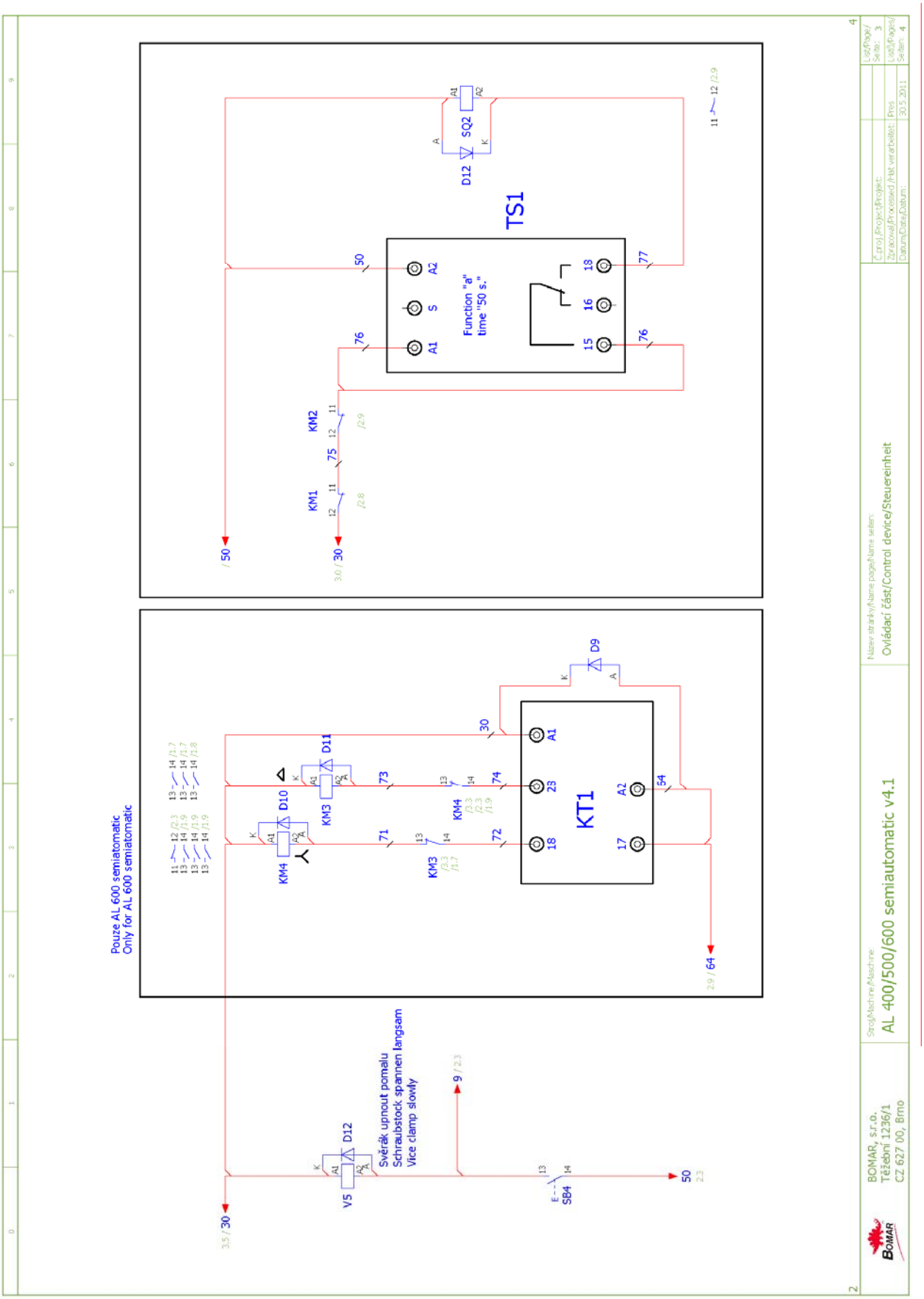
Pouze AL 600 semiatomatic
Only for AL 600 semiatomatic
TS1
Function "a"
time "50 s."
A1
S
A2
15
16
18
SQ2
D12
KM1
KM2
KT1
KM3
KM4
D10
D11
D9
V5
SB4
Svěrák upnout pomalu
Schraubstock spannen langsam
Vice clamp slowly
BOMAR, s.r.o.
Těžební 1236/1
CZ 627 00, Brno
Stroj/Machine/Maschine:
AL 400/500/600 semiautomatic v4.1
Název stránky/Name page/Name seiten:
Ovládací část/Control device/Steuereinheit

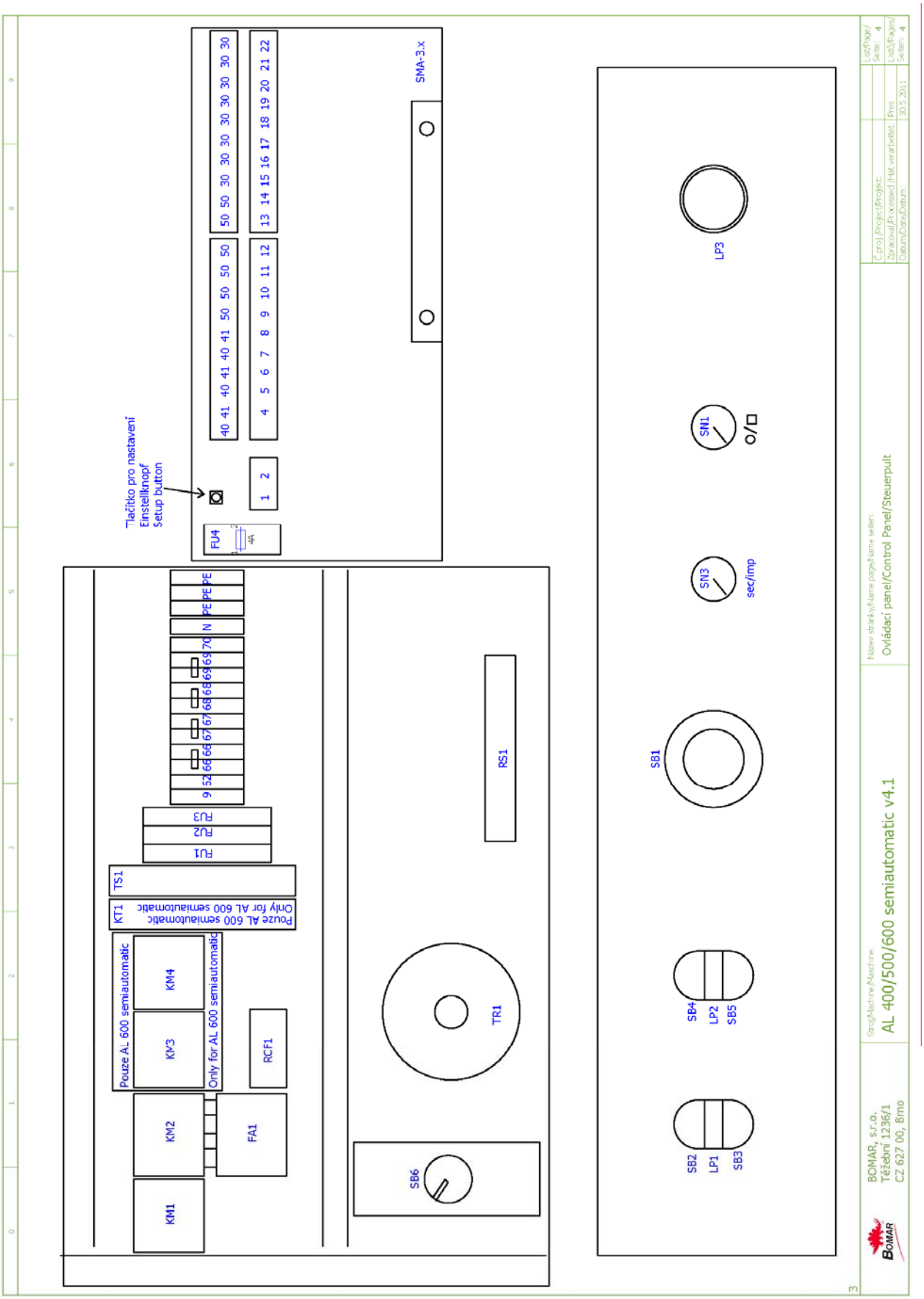
Tlačítko pro nastavení
Einstellknopf
Setup button
FU4
SMA-3.x
KM1
KM2
KM3
KM4
Pouze AL 600 semiautomatic
Only for AL 600 semiautomatic
KT1
TS1
Pouze AL 600 semiautomatic
Only for AL 600 semiautomatic
FU1
FU2
FU3
FA1
RCF1
SB6
TR1
RS1
SB1
SB2
LP1
SB3
SB4
LP2
SB5
SN3
sec/imp
SN1
LP3
BOMAR, s.r.o.
Těžební 1236/1
CZ 627 00, Brno
Stroj/Machine/Maschine:
AL 400/500/600 semiautomatic v4.1
Název stránky/Name page/Name seiten:
Ovládací panel/Control Panel/Steuerpult
List/Page/Seite: 4

5.2. Pneumaticko-hydraulické schéma / Pneumatik-Hydraulikschema / Pneumatic-Hydraulic diagram

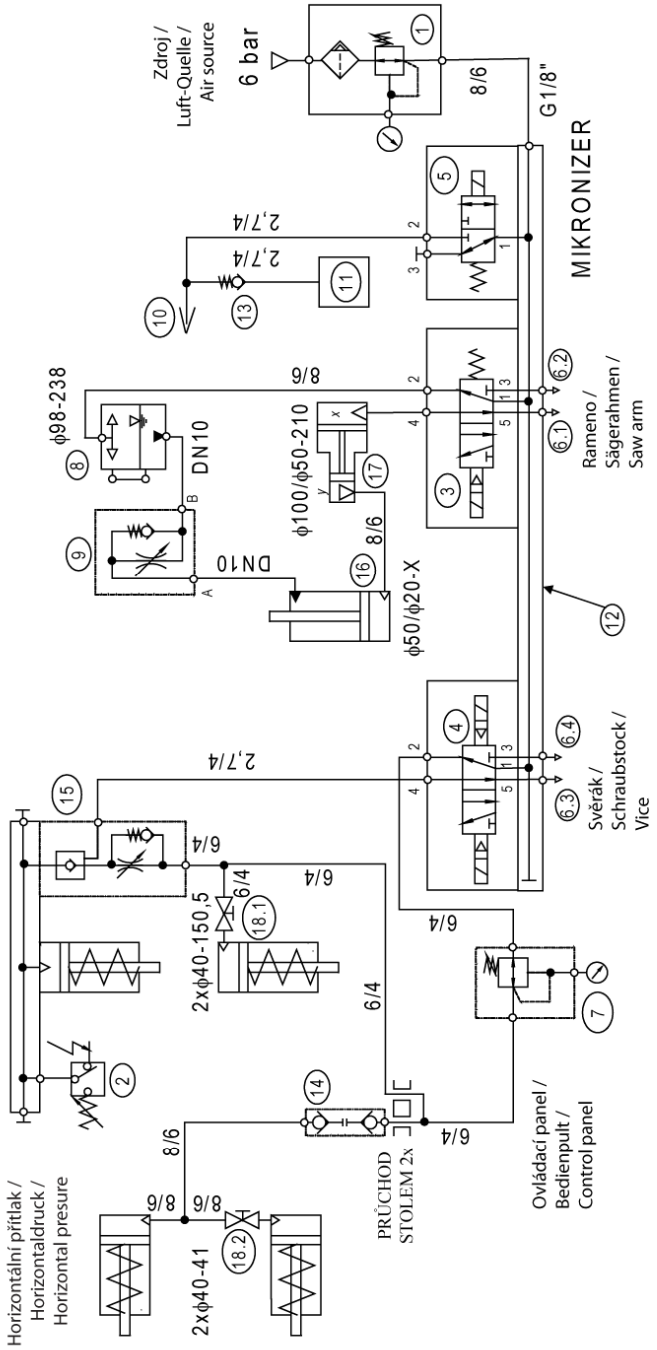

17 Pouze u / nur / only ALU-600

DN10 Hydraulická hadice / Hydraulikschlauch / Hydraulic hose PN 40bar

Hydraulický olej / Hydrauliköle / Hydraulic oil HLP46 na úseku / zwischen / in section 8 - 16

Základní technické parametry
Technische Spezifikation
Technical specification

Typ / Type / Type	AL400, AL500, A600
Hydraulický agregát / Hydroaggregat Hydro aggregat	
Neuvedené světlosti / Unerwähnt Lichtbreite Unlisted inside diameters	JS6
Výstupní šroubení / Ausgangschraubung Output screewing	G1/4"

Poz.	Název položky		ks
Pos.	Bezeichnung		Menge
Pos.	Item		Pcs.
1	Redukční ventil / Reduktionsventil / Control valve	93.003.001	1
2	Tlakový spínač / Druckschalter / Pressure switch	92.201.004	1
3	Rozvaděč / Verteilungsventil / Distributor	93.002.003	1
4	Rozvaděč / Verteilungsventil / Distributor	30.1505-704	1
5	Rozvaděč / Verteilungsventil / Distributor	93.001.0	4
6	Tlumič / Dämpfer / Inhibitor	93.014.003 G1/8"	2
7	Redukční ventil / Reduktionsventil / Control valv	93.002.004	1(0)
8	Výměník / AUSTAUSCHER / exchanger	201.K107-300 V=1,785dm3	1
9	Škrtící ventil / Drosselventil / Throttle-valve	92.152.013 (ALU 400,500) VS01-04/R3,5-O6S 92.152.011 (ALU 600) VS01-04/R3,5-O6	1
10	MIKRONIZER	99.150.002	1
11	Nádrž / Behälter / Tank	94.404.001 0,5dm^3	1
12	Rozvaděč / Verteilungsventil / Distributor	30.0915-101	1
13	Jednosměrný ventil / Einwegventil / One-way valve	93.024.001	1
14	Rychlospojka / Schnellkupplung / Gladhand	93.023.001/.002	1
15	Ventil pojistný / Sicherungsventil / Retaining valve	93.021.002 SMC JAPAN	1
16	Zvedací válec / Hubzylinder / Lifting cylinder	201.K107-000 (ALU400) X=175 201.K307-000 (ALU500) X=228 201.K407-000 (ALU600) X=173	1
17	MULTIPLIKÁTOR (4x)	201.K415-000 Only AL 600	1
18	Ventil uzavírací / Ventil / Valve	99.260.001	2(1)
19	Ventil / Ventil / Valve		1
20	Škrtící ventil / Drosselventil / Throttle-valve	93.021.011	1

6. Výkresy sestav pro objednání náhradních dílů / Zeichnungen für Bestellung der Ersatzteile / Drawing assemblies for spare parts order

- Při objednávání náhradních dílů vždy uvádějte: typ stroje (např. practix AL 400) , výrobní číslo (např. 125) a rok výroby (např. 1999).

- In die Bestellung der Ersatzteile führen Sie immer an: Maschinentyp (z. B. AL 400), Serien Nr. (z. B. 125) und Baujahr (z. B. 1999).

- For spare parts order, you must always to allege: type of machine (for example AL 400), serial number (for example 125, see cover page) and year of construction (for example 1999).

6.1. AL 400

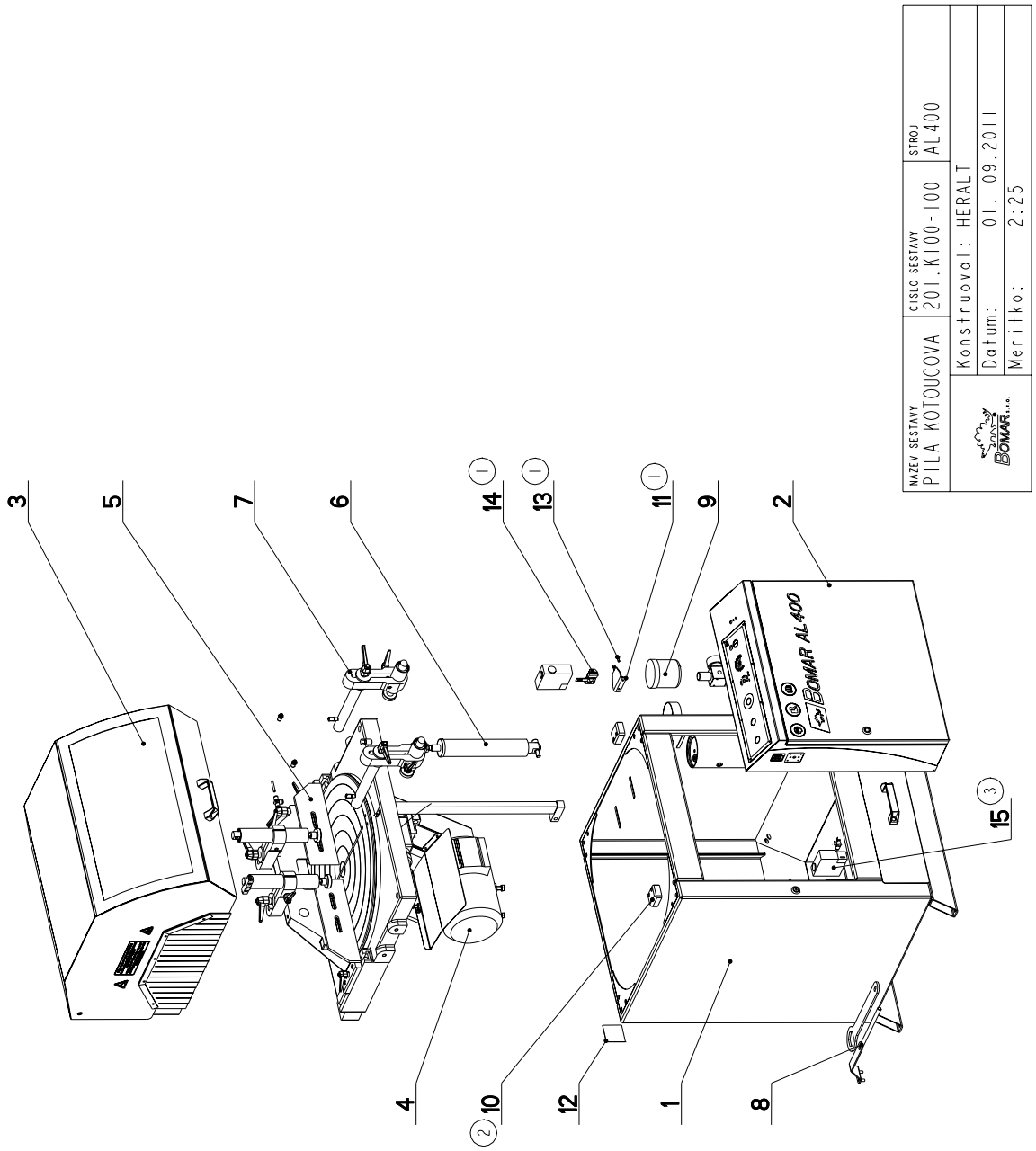
NAZEV SESTAVY
PILA KOTOUCOVA
CISLO SESTAVY
201.K100-100
STROJ
AL400
Konstruoval: HERALT
Datum: 01. 09.2011
Meritko: 2:25
BOMAR
BOMAR AL400
3
5
7
6
14 (1)
13 (1)
11 (1)
9
2
15 (3)
4
10 (2)
12
1
8

6.2. Kusovník / Stückliste / Piece list – AL 400

Cislo Sestavy	Ver.	Nazev sestavy
201.K100-100	3	PILA KOTOUCOVA/ROTARY SAW/KREISSÄGE

Poz.	Objednaci cislo	Ver.	Nazev polozky	Rozmer	Ks
1	201.K101-100	1	PODSTAVEC / BASE / UNTERSATZ		1
2	201.K101-220	3	ROZVADEC / DISTRIBUTOR / VERTEILER		1
3	201.K101-500	2	KRYT / COVER / ABDECKUNG		1
4	201.K102-000	4	RAMENO / SHOULDER / SÄGERAHMEN		1
5	201.K103-000	7	STUL / TABLE / TISCH		1
6	201.K107-000	3	VALEC ZVEDACI / LIFTING CYLINDER / HEBEZYLINDER		1
7	201.K114-000	3	UPINANI HORNI / TOP CLAM / SPANNVORRICHTUNG OBEN		1
8	201.K114-100	0	KLIC / KEY / SCHLÜSSEL		1
9	201.K116-000	1	PNEUMATIKA / TYRE / PNEUMATIK		1
10	30.K103-036 (2)	0	KOSTKA / CUBE / WÜRFEL	HR 50x60	2
11	30.K303-012 (1)	0	DRZAK / HOLDER / HALTER	P 3x70	1
12	31.K199-101	0	STITEK / LABEL / SCHILD	P 0,5-65	1
13	90.001.25.008	0	SROUB IMBUS CERNENY / ALLEN HEAD BOLT / IMBUSSCHRAUBE	M5X12	2
14	91.173.039 (1)	0	ZAMEK / LOCK / SCHLOSS	XCS Z13	1
15	91.173.040 (3)	0	SPINAC KONCOVY / END SWITCH / ENDSCHALTER	D4NL-4HFA-B	2
16	99.900.039 (1)	0	SAMOLEPKA / STICKER / AUFKLEBER	NEBEZP.STLACENI	2
17	99.900.040 (1)	0	SAMOLEPKA / STICKER / AUFKLEBER		2
18	99.900.046	0	SAMOLEPKA / STICKER / AUFKLEBER		1
19	99.900.047	0	SAMOLEPKA / STICKER / AUFKLEBER		1
20	99.900.048	0	SAMOLEPKA / STICKER / AUFKLEBER		1
21	99.900.049	0	SAMOLEPKA / STICKER / AUFKLEBER		1
22	99.900.066 (1)	0	SAMOLEPKA / STICKER / AUFKLEBER	NEVKLADAT RUCE	2
23	99.901.008		SAMOLEPKA / STICKER / AUFKLEBER	AL400	1

1.PRID.DRZAK 30.K303-012,KOSTKA 30.K303-036,ZAMEK 91.173.039,SPINAC KONCOVY 91.173.040,SROUB M5x12 90.001.25.008, SAMOLEPKY 99.900.039,99.900.040,99.900.066 . 259/ZM257 29.9.2010 SLEZACKOVA
2. VYMENEN DIL KOSTKA 30.K303-036 ZA DIL KOSTKA 30.K103-036. 305/ZM299 19.11.2010 HERALT

3.PRID.1xKONCOVY SPINAC 91.173.040. 151/ZM190 1.9.2011 SLEZACKOVA

Cislo Sestavy/Number of assembly/Nummer der Baugruppe; Verze (Ver.)/Version/Version; Nazev sestavy/Assembly title/Name der Baugruppe; Pozice (Poz.)/Position/Position; Objednaci cislo/Purchase order number/Bestellnummer; Nazev polozky/Volume title/Name der Position; Rozmer/Stock size/Abmessung

6.3. Rameno / Sägerahmen / Saw arm - 1

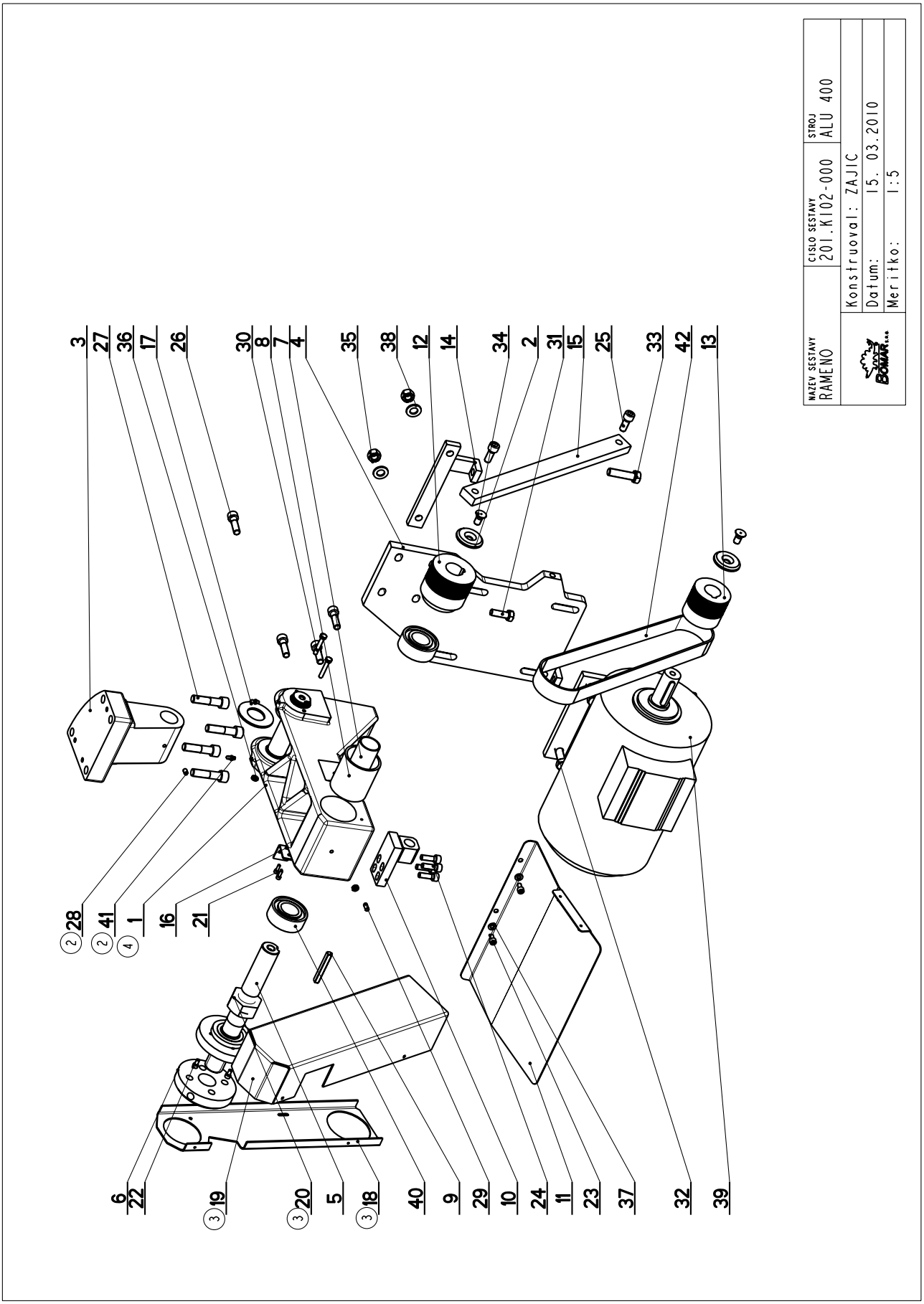

Cislo Sestavy	Ver.	Nazev sestavy
201.K102-000	4	RAMENO/SHOULDER/SÄGERAHMEN

Poz.	Objednaci cislo	Ver.	Nazev polozky	Rozmer	Ks
1	201.K102-050 (4)	0	KONZOLA / CONSOLE / KONSOLE		1
2	30.1704-008	0	PODLOZKA / WASHER / UNTERLEGSCHEIBE	d 45	2
3	30.K102-001	3	KONZOLA / CONSOLE / KONSOLE	ODLITEK	1
4	30.K102-003	2	DRZAK / HOLDER / HALTER		1
5	30.K102-004	4	HRIDEL / SHAFT / WELLE	d 100	1
6	30.K102-005	2	KOTOUC / DISC / SCHEIBE	TYC 100	1
7	30.K102-006	1	DISTANC / DISTANCE / DISTANZ	TR 35x2	1
8	30.K102-007	1	DISTANC / DISTANCE / DISTANZ	TR 65x5	1
9	30.K102-009	0	PERO / SPRING / FEDER	8x7	1
10	30.K102-010	3	DRZAK / HOLDER / HALTER		1
11	30.K102-011	3	KRYT MOTORU / MOTOR COVER / MOTORABDECKUNG	P1.5x280	1
12	30.K102-017	1	REMENICE / PULLEY / RIEMENSCHEIBE	d 75	1
13	30.K102-018	1	REMENICE / PULLEY / RIEMENSCHEIBE	d 65	1
14	30.K102-020	2	NAPINANI / TENSIONING / SPANNUNG		1
15	30.K102-021	1	VYZTUHA / REINFORCEMENT / VERSTEIFUNG	HR 30x15	1
16	30.K102-022	2	DRZAK / HOLDER / HALTER	P2 x 25	1
17	30.K102-023	2	KROUZEK / RING / RING	VYPALEK	1
18	30.K102-026 (3)	1	KRYT REMENE / BELT COVER / RIEMENABDECKUNG	P2x120	1
19	30.K102-027 (3)	0	KRYT REMENE / BELT COVER / RIEMENABDECKUNG	P 2 x255	1
20	30.K102-028 (3)	0	MATICE / NUT / MUTTER	TYC 6HR 46	1
21	90.001.25.003	0	SROUB IMBUS / ALLEN HEAD BOLT / IMBUSSCHRAUBE	M4X12	2
22	90.001.25.007	0	SROUB IMBUS / ALLEN HEAD BOLT / IMBUSSCHRAUBE	M5X10	2
23	90.001.25.016	0	SROUB IMBUS / ALLEN HEAD BOLT / IMBUSSCHRAUBE	M6X12	2
24	90.001.25.033	0	SROUB IMBUS / ALLEN HEAD BOLT / IMBUSSCHRAUBE	8x25	4
25	90.001.25.047	0	SROUB IMBUS / ALLEN HEAD BOLT / IMBUSSCHRAUBE	M10X25	2
26	90.001.25.049	0	SROUB IMBUS / ALLEN HEAD BOLT / IMBUSSCHRAUBE	M10X35	4
27	90.001.25.062	0	SROUB IMBUS / ALLEN HEAD BOLT / IMBUSSCHRAUBE	M12X50	4
28	90.002.20.023	0	SROUB STAVECI / ADJUSTMENT BOLT / STELLSCHRAUBE	SROUB M6X10	1
29	90.003.20.007	0	SROUB STAVECI / ADJUSTMENT BOLT / STELLSCHRAUBE	SROUB M6X16	1
30	90.005.55.011	0	SROUB 6HRANNY / 6 SIDED BOLT / SECHSKANTSCHRAUBE	SROUB M6X35	2
31	90.005.55.025	0	SROUB 6HRANNY / 6 SIDED BOLT / SECHSKANTSCHRAUBE	SROUB M10X30	1
32	90.005.55.034	0	SROUB 6HRANNY / 6 SIDED BOLT / SECHSKANTSCHRAUBE	SROUB M12X40	4
33	90.005.55.035	0	SROUB 6HRANNY / 6 SIDED BOLT / SECHSKANTSCHRAUBE	SROUB M12X45	1
34	90.011.27.008	0	SROUB ZAPUSTNY / COUNTERSINK BOLT / SENKSCHRAUBE	SROUB M10X20	2
35	90.100.55.007	0	MATICE / NUT / MUTTER	MATICE _ M12	2
36	90.101.55.008	0	MATICE / NUT / MUTTER	MATICE M6	3

6.5. Rameno / Sägerahmen / Saw arm - 2

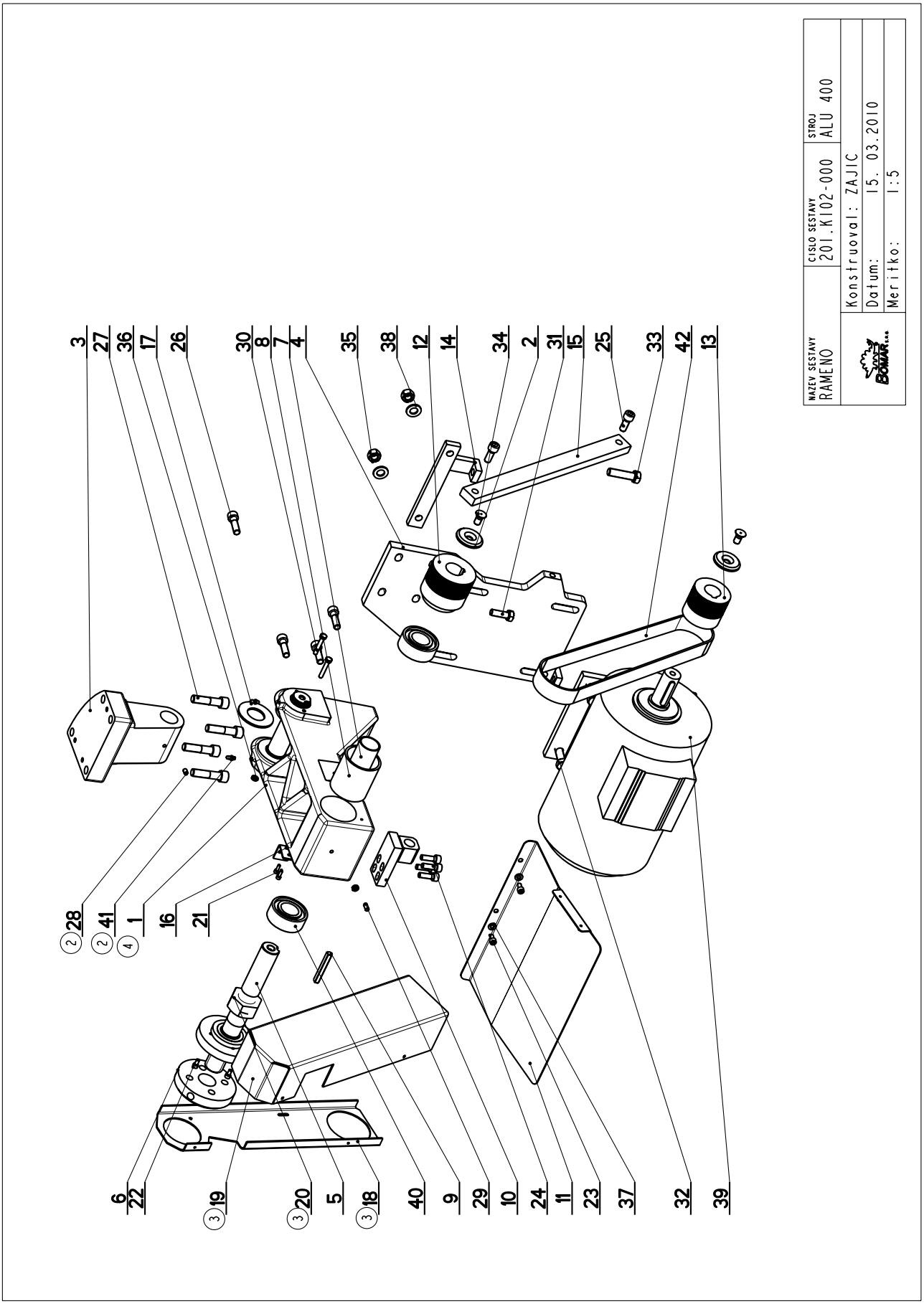

Cislo Sestavy	Ver.	Nazev sestavy
201.K102-000	4	RAMENO/SHOULDER/SÄGERAHMEN

Poz.	Objednaci cislo	Ver.	Nazev polozky	Rozmer	Ks
37	90.150.50.004	0	PODLOZKA / WASHER / UNTERLEGSCHEIBE	PODLOZKA 6,4	2
38	90.150.50.007	0	PODLOZKA / WASHER / UNTERLEGSCHEIBE	PODLOZKA 13	2
39	91.001.041	0	ELEKTROMOTOR / ELECTRIC MOTOR / ELEKTROMOTOR	3 kW	1
40	95.001.039	0	LOZISKO / BEARING / LAGER	5206-2RS	2
41	95.860.001 (2)	0	HLAVICE MAZACI / HEAD / KOPF	KM5	2
42	99.023.003	0	REMEN DRAZKOVY / GROOVED BELT / KEILRIPPENRIEMEN	12PJ	1

1. ZMENA NOVA SOUCAST 30.K102-023 26.1.2004
2. ZM. PRIDANY SOCASTI POZ. 90.002.2D.023,95.860.001.16.12.04 VRSECKY
3. ZMENA NOVA SOUCAST 30.K102-025, 30.K102-026, 30.K102-027, ZMENA DILU 90.100.25.001 NAHRADIL DIL 30.K102-028
   4.1.2006 RYSAVY
4. ZRUSENA SOUCAST 30.K102-008, 30.K102-002, 30.K102-025, NOVA SOUCAST 201.K102-050 20.4.2006 RYSAVY

6.7. Podstavec / Untersatz / Base

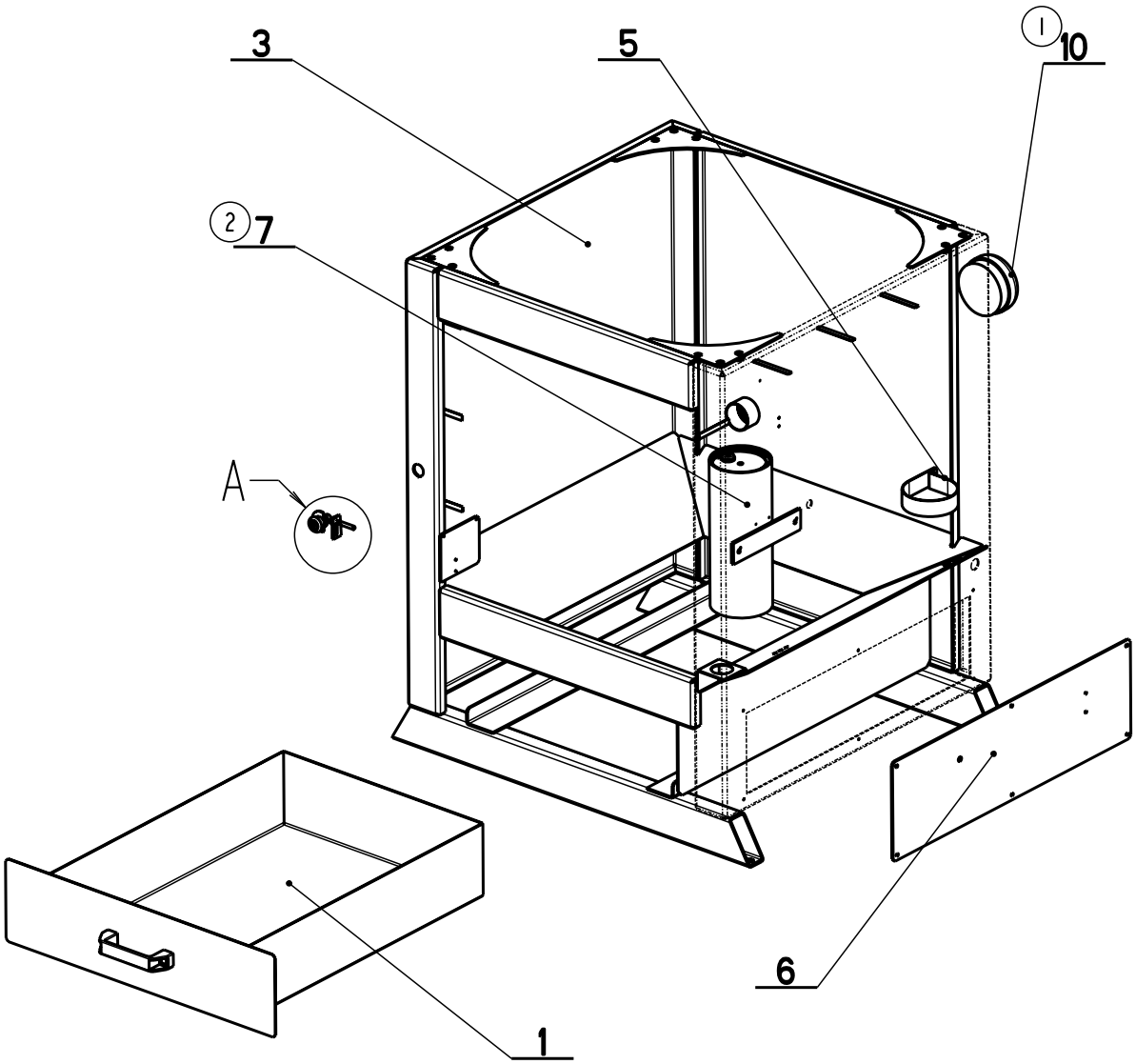

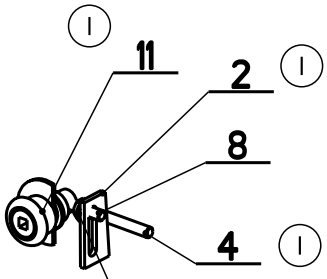

A
3:10

NAZEV SESTAVY	CISLO SESTAVY	STROJ
PODSTAVEC	201.K101-100	AL400

BOMAR s.r.o.	Konstruoval: TOK
	Datum: 15. 02.2010
	Meritko: 1:10

Cislo Sestavy	Ver.	Nazev sestavy
201.K101-100	1	PODSTAVEC/BASE/UNTERSATZ

Poz.	Objednaci cislo	Ver.	Nazev polozky	Rozmer	Ks
1	201.K101-145	0	VANA / TANK / WANNE		1
2	30.K100-111 (1)	0	DRZAK / HOLDER / HALTER	P 3-22	1
3	30.K101-101	1	PODSTAVEC / BASE / UNTERSATZ		1
4	30.K101-154 (1)	0	TYC / POLE / STANGE	D 6	1
5	30.K103-023	0	DRZAK / HOLDER / HALTER	P1.5x30	1
6	30.K107-112	1	KRYT / COVER / ABDECKUNG	P 3x 190	1
7	30.K107-300 (2)	1	VALEC / CONTAINER / BEHÄLTER		1
8	90.005.55.006	0	SROUB 6HRANNY / 6 SIDED BOLT / SECHSKANTSCHRAUBE	SROUB M6X12	1
9	90.150.50.004	0	PODLOZKA / WASHER / UNTERLEGSCHEIBE	PODLOZKA 6,4	1
10	94.100.020 (1)	0	ZATKA / PLUG / STOPFEN		1
11	99.104.004 (1)	0	ZAMEK ROZVADECOVY / DISTRIBUTOR LOCK / VERTEILERSCHLOSS	LK3	1

1. ZRUSEN ZAMEK 91.990.001 A NAHRAZEN 99.104.004, PRIDANY SOUCASTI 30.K101-154, 30.K100-111 A 94.100.020 026/ZM038 9.2.2010 TOK

2.ZRUS.SOUCAST 201.K107-300 A NAHR.30.K107-300. 048/ZM148 24.5.2010 SLEZACKOVA

Cislo Sestavy/Number of assembly/Nummer der Baugruppe; Verze (Ver.)/Version/Version; Nazev sestavy/Assembly title/Name der Baugruppe; Pozice (Poz.)/Position/Position; Objednaci cislo/Purchase order number/Bestellnummer; Nazev polozky/Volume title/Name der Position; Rozmer/Stock size/Abmessung

6.9. Kryt / Cover / Abdeckung

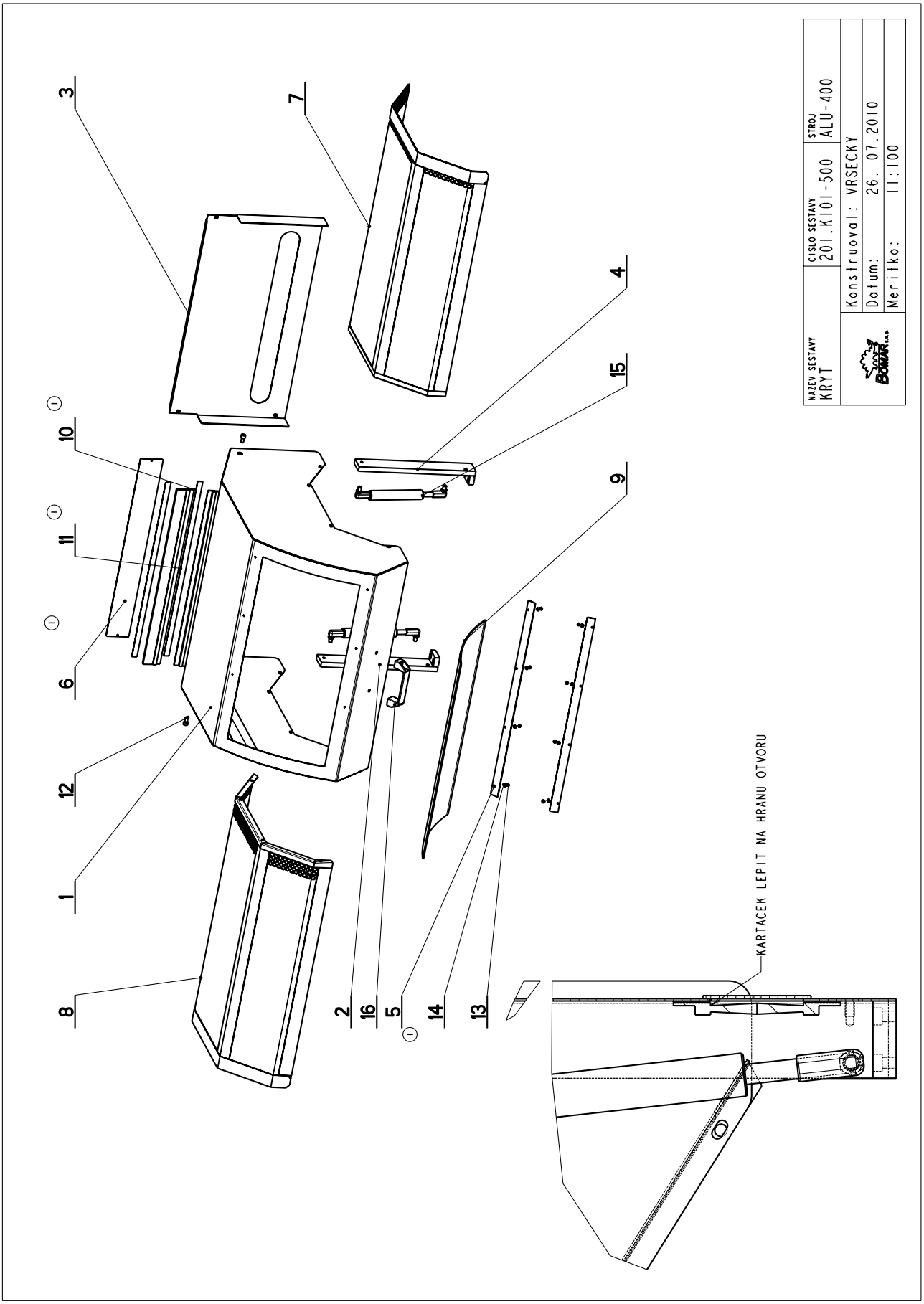

Cislo Sestavy	Ver.	Nazev sestavy
201.K101-500	1	KRYT/COVER/ABDECKUNG

Poz.	Objednaci cislo	Ver.	Nazev polozky	Rozmer	Ks
1	30.K101-501	1	KRYT / COVER / ABDECKUNG		1
2	30.K101-502	1	DRZAK / HOLDER / HALTER		1
3	30.K101-503	2	KRYT / COVER / ABDECKUNG	P2 x 367	1
4	30.K101-504	0	DRZAK / HOLDER / HALTER		1
5	30.K101-506	0	LISTA / TRIM / LEISTE	P2 x 25	2
6	30.K101-512	0	VIKO / COVER / DECKEL	P 2x70x590	1
7	30.K101-513	0	KRYT / /		1
8	30.K101-514	1	KRYT / /		1
9	31.K101-505	0	SKLO ORGANICKE / PLEXIGLASS / PLEXIGLAS	3x335	1
10	49.250.004	0	KARTAC / BRUSH / BÜRSTE	FBL6000-K5	2
11	61.360.002	0	PAS / BELT / BAND		2
12	90.001.25.031	0	SROUB IMBUS CERNENY / ALLEN HEAD BOLT / IMBUSSCHRAUBE	8x16	2
13	90.100.55.002	0	MATICE / NUT / MUTTER	MATICE _ M4	8
14	90.150.50.002	0	PODLOZKA / WASHER / UNTERLEGSCHEIBE	PODLOZKA 4,3	8
15	93.004.006	0	VZPERA PLYNOVA / GAS PROP / GASDRUCKFEDER	GF 14/28	2
16	94.012.001	0	RUKOJET / HANDLE / GRIFF		1

1. ZM. SOUCAST 30.K101-506 ZRUSENA, NOVA SOUCAST 30.K101-509
2. ZM. PRIDANY POZ. 49.250.004,61.360.002,30.K101-512,POZ. 94.012.001 NAHRADILA POZ. 30.K101-509. 5.11.04 VRSECKY

POZ. 49.250.004 PRED LEPENIM ODMASTIT A LEPIT OBOUSTRANNOU LEPICI PASKOU POZ. 61.360.002 NA ODMASTENOU PLOCHU

6.11. Stůl / Table / Tisch

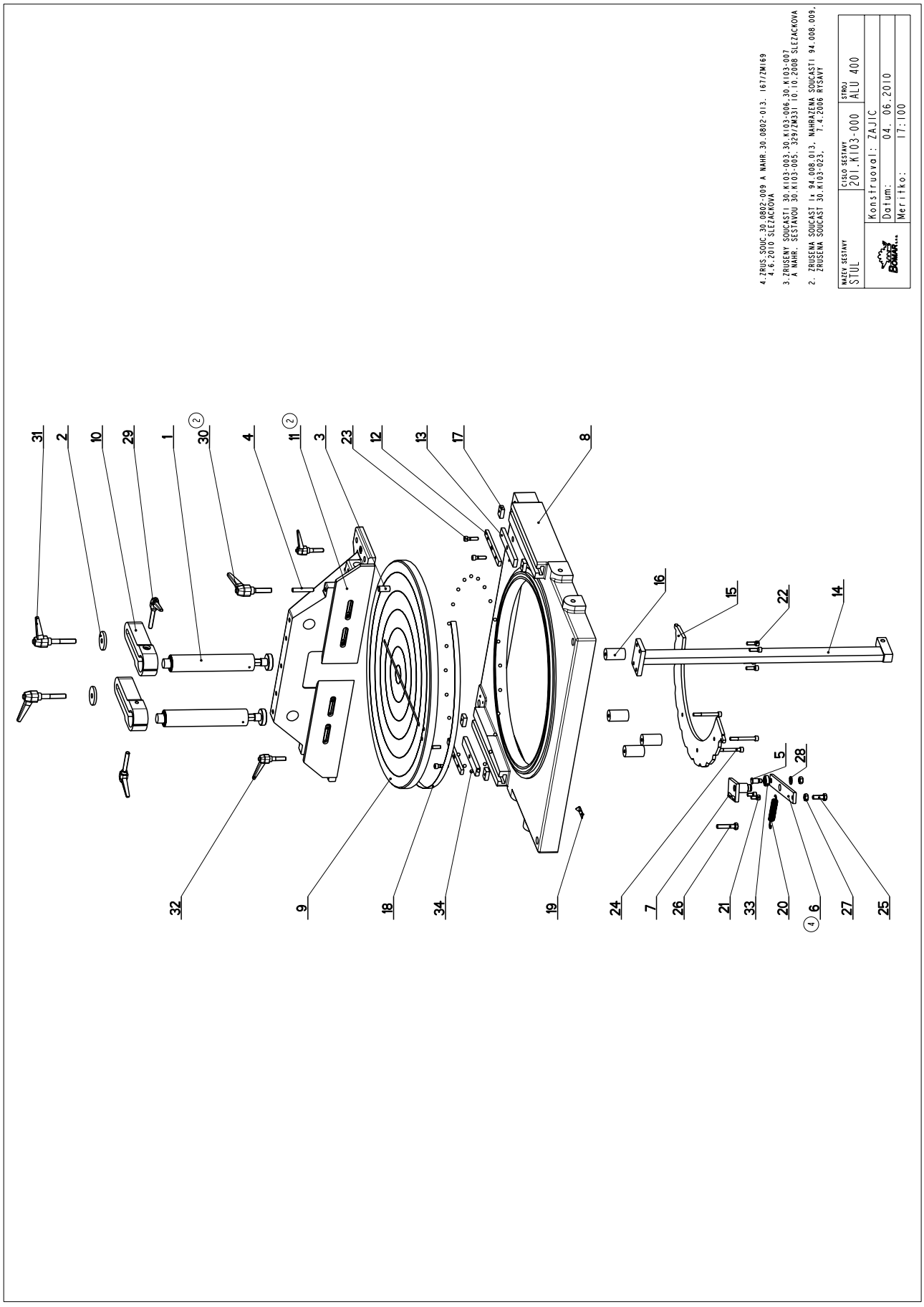

6.12. Kusovník / Stückliste / Piece list – Stůl / Table / Tisch

Cislo Sestavy	Ver.	Nazev sestavy
201.K103-000	4	STUL/TABLE/TISCH

Poz.	Objednaci cislo	Ver.	Nazev polozky	Rozmer	Ks
1	201.K107-100	0	VALEC UPINACI / FIXING CYLINDER / SPANNZYLINDER		2
2	30.0502-603	1	PODLOZKA / WASHER / UNTERLEGSCHEIBE	d50	2
3	30.0509-606	0	VALECEK / CYLINDER / ROLLE	d15	1
4	30.0509-616	0	TYC / POLE / STANGE	d10	1
5	30.0802-011	0	CEP / LUG / BOLZEN	d16	1
6	30.0802-013 (4)	0	PAKA / LEVER / HEBEL	HR 30 x 8	1
7	30.3509-013	1	CEP / LUG / BOLZEN		1
8	30.K103-001	7	STUL / TABLE / TISCH		1
9	30.K103-002	4	STUL / TABLE / TISCH	ODLITEK	1
10	30.K103-004	2	DRZAK / HOLDER / HALTER	ODLITEK	2
11	30.K103-005 (3)	0	CELIST PEVNA / SOLID JAW / FESTE BACKE	SESTAVA	1
12	30.K103-008	1	LISTA VODICI / LEAD TRIM / FÜHRUNGSLEISTE	HR 15x8	2
13	30.K103-009	1	LISTA VODICI / LEAD TRIM / FÜHRUNGSLEISTE	HR 25x10	2
14	30.K103-013	2	DRZAK / HOLDER / HALTER		1
15	30.K103-015	3	SEGMENT / SEGMENT / SEGMENT	P8 - 237	1
16	30.K103-016	2	DISTANC / DISTANCE / DISTANZ	d30	4
17	30.K103-017	2	DORAZ / STOP PIECE / ANSCHLAG	HR 20 x 10	4
18	30.K103-018	3	MERITKO / MEASURE / SKALA	P 0.5x15	1
19	30.K103-024	0	UKAZATEL / INDICATOR / ZEIGER	P1 1x15	1
20	31.0206-005	0	PRUZINA / SPRING / FEDER	2.50x16x90x27	1
21	90.001.25.031	0	SROUB IMBUS CERNENY / ALLEN HEAD BOLT / IMBUSSCHRAUBE	8x16	2
22	90.001.25.033	0	SROUB IMBUS CERNENY / ALLEN HEAD BOLT / IMBUSSCHRAUBE	8x25	4
23	90.001.25.034	0	SROUB IMBUS / ALLEN HEAD BOLT / IMBUSSCHRAUBE	M8X30	4
24	90.001.25.095	0	SROUB IMBUS / ALLEN HEAD BOLT / IMBUSSCHRAUBE	M8X70	4
25	90.005.55.025	0	SROUB 6HRANNY / 6 SIDED BOLT / SECHSKANTSCHRAUBE	SROUB M10X30	1
26	90.005.55.028	0	SROUB 6HRANNY / 6 SIDED BOLT / SECHSKANTSCHRAUBE	SROUB M10X50	1
27	90.100.55.006	0	MATICE / NUT / MUTTER	MATICE _ M10	2
28	90.150.50.006	0	PODLOZKA / WASHER / UNTERLEGSCHEIBE	PODLOZKA 10,5	1
29	94.008.006	0	PAKA UPINACI / ATTACHMENT LEVER / SPANNHEBEL	M10	2
30	94.008.009 (2)	0	PAKA UPINACI / ATTACHMENT LEVER / SPANNHEBEL	M12	1
31	94.008.012	0	PAKA UPINACI / ATTACHMENT LEVER / SPANNHEBEL	M12x70	2
32	94.008.013	0	PAKA UPINACI / ATTACHMENT LEVER / SPANNHEBEL	M10	2
33	95.001.005	0	LOZISKO / BEARING / LAGER	6001 2RS	1
34	95.691.006	0	KOLECKO / WHEEL / ROLLE	RB 8	25

6.13. Válec / Zylinder / Cylinder

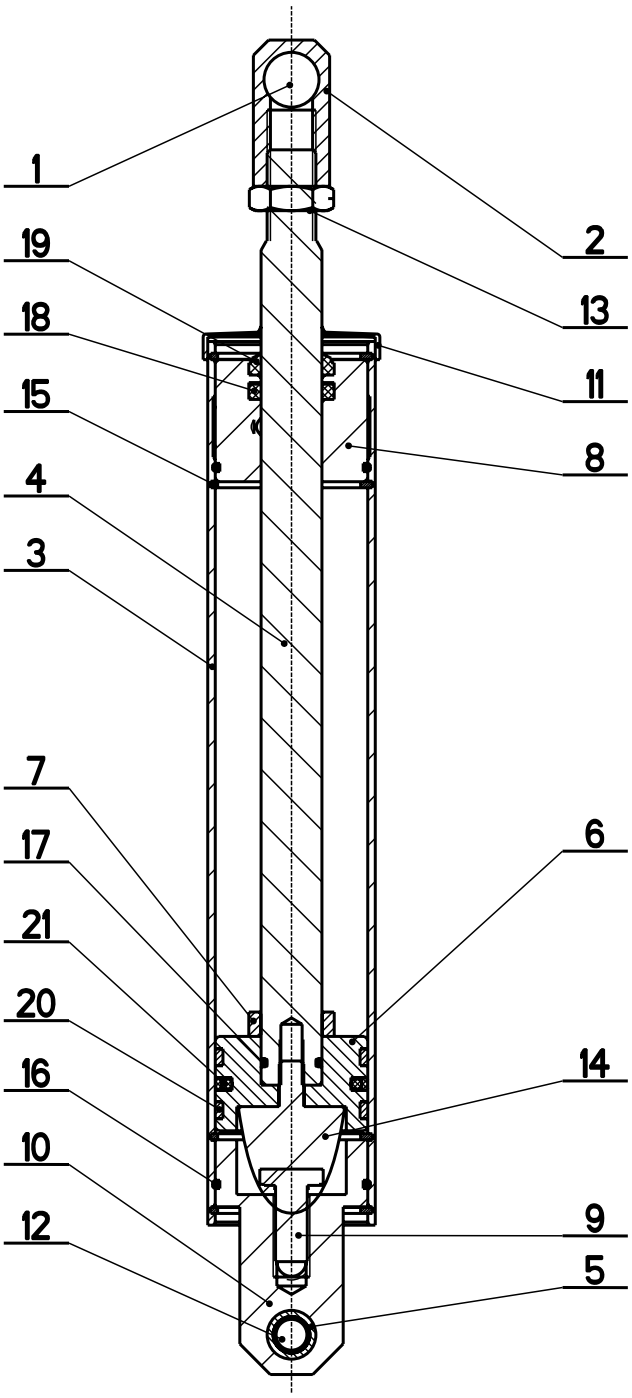

NAZEV SESTAVY	CISLO SESTAVY	STROJ
VALEC ZVEDACI	201.K107-000	ALU 400

Konstruoval:	ZAJIC
Datum:	19. 01.2010
Meritko:	1:2

6.14. Kusovník / Stückliste / Piece list – Válec zvedací / Hebezylinder / Lifting cylinder

Cislo Sestavy	Ver.	Nazev sestavy
201.K107-000	3	VALEC ZVEDACI/LIFTING CYLINDER/HEBEZYLINDER

Poz.	Objednaci cislo	Ver.	Nazev polozky	Rozmer	Ks
1	30.0514-904	0	CEP / LUG / BOLZEN	d 18	1
2	30.0807-006	0	DRZAK / HOLDER / HALTER	TYC 25x25	1
3	30.K107-001	1	VALEC / ROLLER / ZYLINDER	TR 55/50H8	1
4	30.K107-002	0	PISTNICE / PISTON ROD / KOLBENSTANGE	d20	1
5	30.K107-003	2	POUZDRO / SLEEVE / BÜCHSE	d 18	1
6	30.K107-004	1	PIST / PISTON / KOLBEN	TYC 55	1
7	30.K107-005	0	DISTANC / DISTANCE / DISTANZ	TR 28x4	1
8	30.K107-008	3	VIKO / COVER / DECKEL	d 55	1
9	30.K107-009	1	SROUB 6HRANNY / 6 SIDED BOLT / SECHSKANTSCHRAUBE	SROUB M12X25	1
10	30.K107-011	2	VIKO / COVER / DECKEL	d 50	1
11	31.2807-006	0	VIKO / COVER / DECKEL	50/55-20	1
12	90.001.25.062	0	SROUB IMBUS / ALLEN HEAD BOLT / IMBUSSCHRAUBE	M12X50	1
13	90.101.55.003	0	MATICE / NUT / MUTTER	MATICE M16	1
14	94.700.001	0	SILENTBLOK / SILENT BLOCK / SCHWINGUNGSDÄMPFER		1
15	95.801.018	0	KROUZEK POJIST.VNITR / INSIDE SAFETY RING / SICHERUNGSRING INNEN	POJISTNY KROUZEK 50	4
16	96.001.013	0	KROUZEK O STATICKY / STATIC O RING / O-RING STATISCH	45X2	2
17	96.002.007	0	KROUZEK O DYNAMICKY / DYNAMIC O RING / O-RING DYNAMISCH	16X2	1
18	96.041.002	0	TESNENI / SEALING / DICHTUNG	601-20x28x5	1
19	96.060.002	0	KROUZEK STIRACI / SCRAPER RING / ABSTREIFRING	KROUZEK STIRACI 20	1
20	96.084.001	0	KROUZEK VODICI / LEAD RING / FÜHRUNGSRING		2
21	96.900.001	0	TESNENI KOMBINOVANE / COMBINATION SEALING / KOMBIDICHTUNG		1

6.15. Válec upínací / Spannzylinder / Fixing cylinder 1

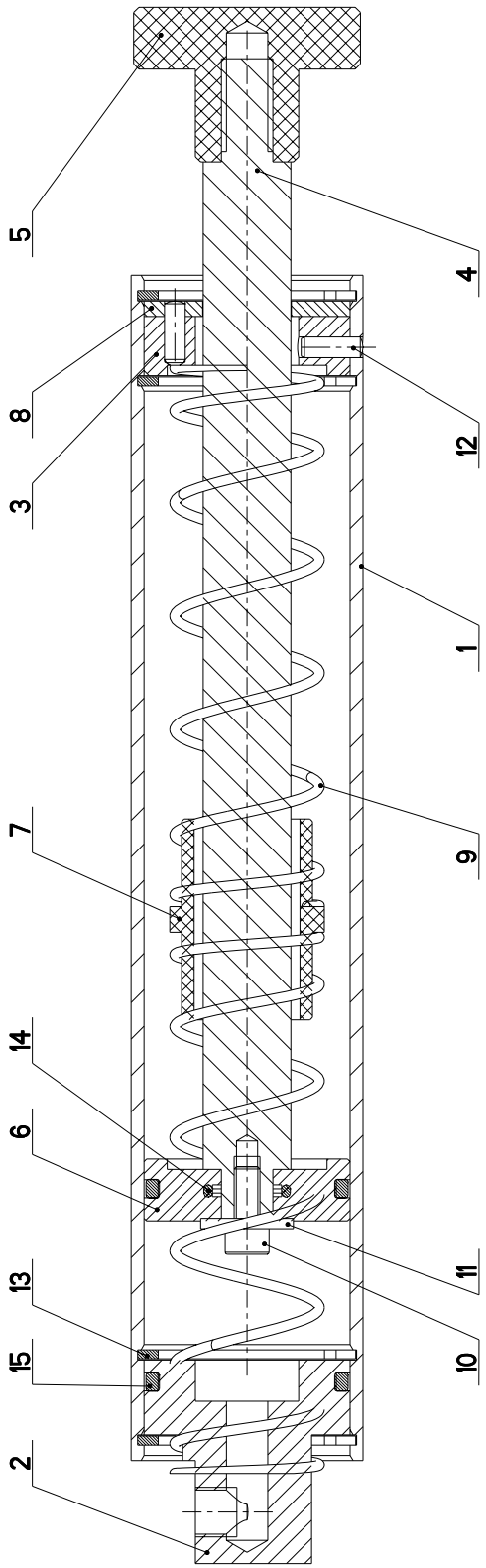

NAZEV SESTAVY VALEC UPINACI	CISLO SESTAVY 201.K107-100	STROJ ALU 400
	Konstruoval: ZAJIC	
	Datum: 07. 01.2010	
	Meritko: 6:5	

6.16. Kusovník / Stückliste / Piece list – Válec upínací / Spannzylinder / Fixing cylinder 1

Cislo Sestavy	Ver.	Nazev sestavy
201.K107-100	0	VALEC UPINACI/FIXING CYLINDER/SPANNZYLINDER

Poz.	Objednaci cislo	Ver.	Nazev polozky	Rozmer	Ks
1	30.K107-101	0	VALEC UPINACI / FIXING CYLINDER / SPANNZYLINDER	TR 45/40H8	1
2	30.K107-102	0	VIKO / COVER / DECKEL	d 45	1
3	30.K107-103	1	VIKO / COVER / DECKEL	d 45	1
4	30.K107-104	2	PISTNICE / PISTON ROD / KOLBENSTANGE	6HR-17	1
5	30.K107-105	1	DORAZ / STOP PIECE / ANSCHLAG	d 50	1
6	30.K107-106	1	PIST / PISTON / KOLBEN	d 45	1
7	30.K107-109	0	KROUZEK VODICI / LEAD RING / FÜHRUNGSRING	d 30	1
8	30.K107-111	0	KROUZEK VODICI / LEAD RING / FÜHRUNGSRING	d 40	1
9	31.K107-107	0	PRUZINA / SPRING / FEDER	2x30x105x(5+2)	2
10	90.001.25.008	0	SROUB IMBUS CERNENY / ALLEN HEAD BOLT / IMBUSSCHRAUBE	M5X12	1
11	90.151.50.006	0	PODLOZKA VELKOPL. / WASHER / UNTERLEGSCHEIBE	PODLOZKA 5	1
12	90.303.0Z.013	0	KOLIK PRUZNY / PIN / BOLZEN	KOLIK 4X12	2
13	95.801.005	0	SEGR DIRA / INSIDE SAFETY RING / SICHERUNGSRING INNEN	POJISTNY KROUZEK 40	4
14	96.001.004	0	O-KROUZEK STATIC / STATIC O RING / O-RING STATISCH	10X2	1
15	96.002.017	0	O-KROUZEK DYNAMIC / DYNAMIC O RING / O-RING DYNAMISCH	34X3	2

6.17. Válec upínací / Spannzylinder / Fixing cylinder 2

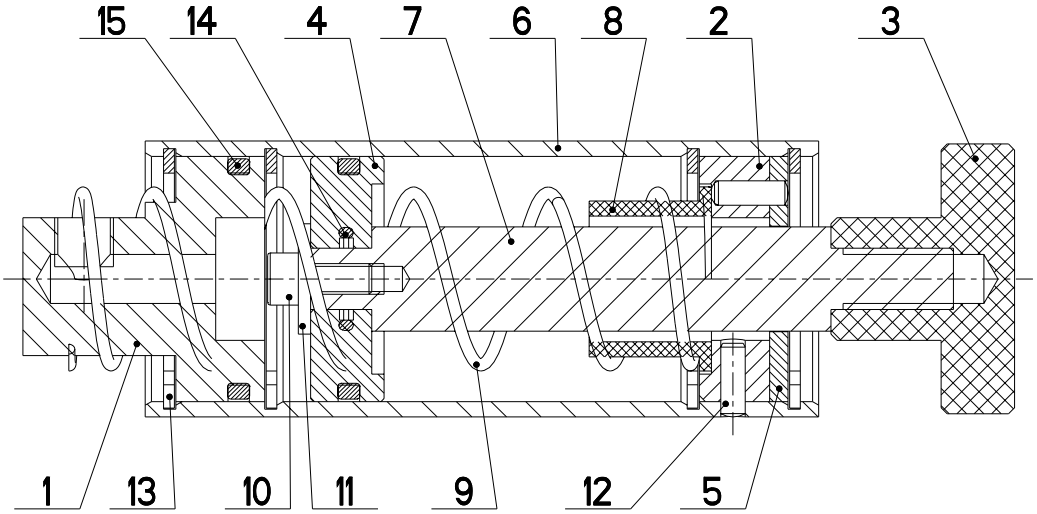

NAZEV SESTAVY	CISLO SESTAVY	STROJ
VALEC UPINACI	201.K107-200	ALU-400

BOMAR s.r.o.	Konstruoval: ZAJIC
	Datum: 11. 01.2010
	Meritko: 1:1

6.18. Kusovník / Stückliste / Piece list – Válec upínací / Spannzylinder / Fixing cylinder 2

Cislo Sestavy	Ver.	Nazev sestavy
201.K107-200	0	VALEC UPINACI/FIXING CYLINDER/SPANNZYLINDER

Poz.	Objednaci cislo	Ver.	Nazev polozky	Rozmer	Ks
1	30.K107-102	0	VIKO / COVER / DECKEL	d 45	1
2	30.K107-103	1	VIKO / COVER / DECKEL	d 45	1
3	30.K107-105	1	DORAZ / STOP PIECE / ANSCHLAG	d 50	1
4	30.K107-106	1	PIST / PISTON / KOLBEN	d 45	1
5	30.K107-111	0	KROUZEK VODICI / LEAD RING / FÜHRUNGSRING	d 40	1
6	30.K107-201	0	VALEC / ROLLER / ZYLINDER	TR 45/40H8	1
7	30.K107-204	0	PISTNICE / PISTON ROD / KOLBENSTANGE	6HR-17	1
8	30.K107-209	0	VEDENI / GUIDE / BACKENFÜHRUNG	d30	1
9	31.K107-107	0	PRUZINA / SPRING / FEDER	2x30x105x(5+2)	1
10	90.001.25.008	0	SROUB IMBUS CERNENY / ALLEN HEAD BOLT / IMBUSSCHRAUBE	M5X12	1
11	90.151.50.006	0	PODLOZKA / WASHER / UNTERLEGSCHEIBE	PODLOZKA 5	1
12	90.303.0Z.013	0	KOLIK / PIN / BOLZEN	KOLIK 4X12	2
13	95.801.005	0	KROUZEK POJIST.VNITR / INSIDE SAFETY RING / SICHERUNGSRING INNEN	POJISTNY KROUZEK 40	4
14	96.001.004	0	O-KROUZEK STATIC / STATIC O RING / O-RING STATISCH	10X2	1
15	96.002.017	0	O-KROUZEK DYNAMIC / DYNAMIC O RING / O-RING DYNAMISCH	34X3	2

6.19. Vana / Wanne / Tank

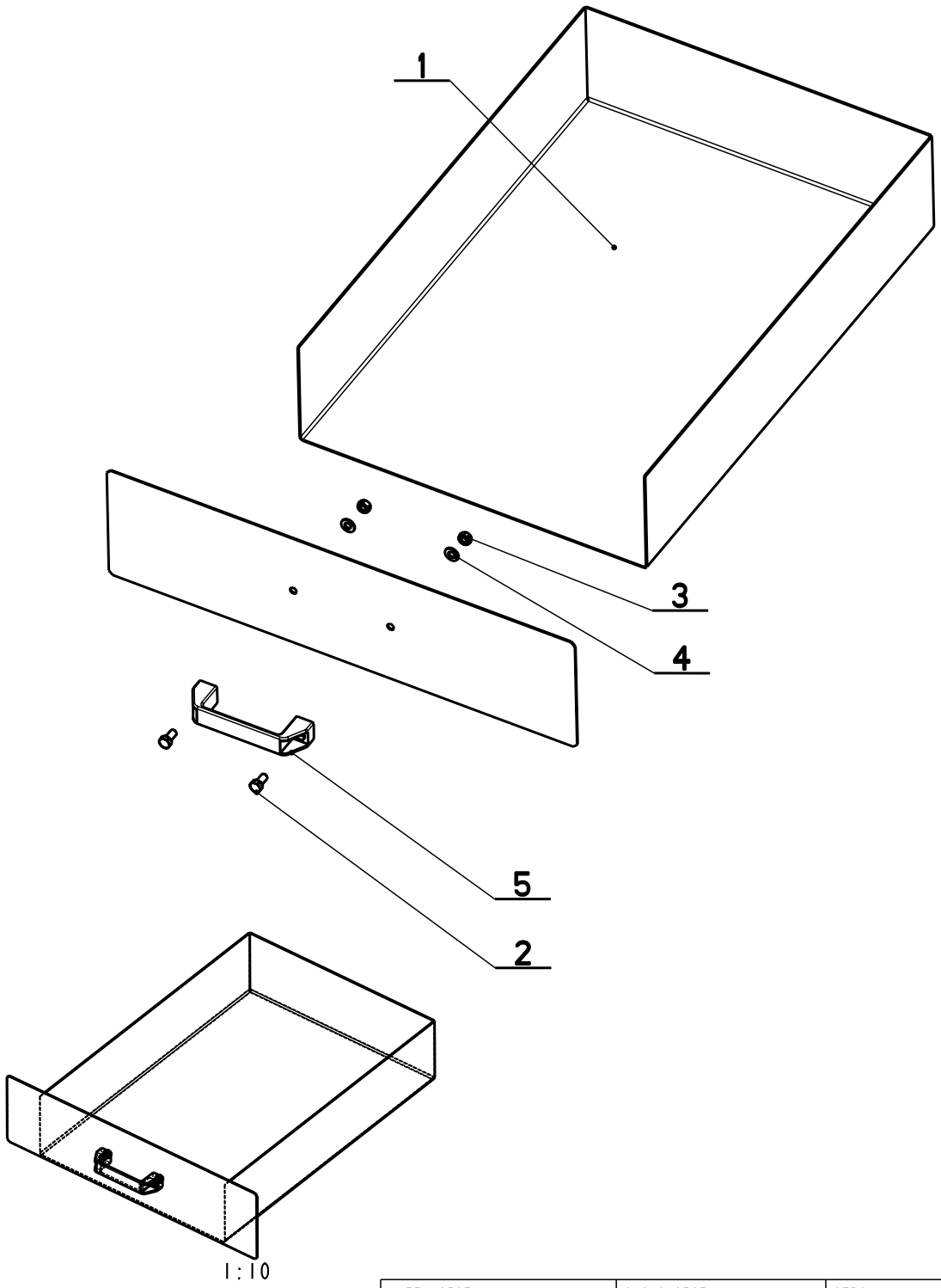

NAZEV SESTAVY	CISLO SESTAVY	STROJ
VANA	201.K101-145	AL400

Konstruoval:	TOK
Datum:	16. 12.2009
Meritko:	17:100

6.20. Kusovník / Stückliste / Piece list – Vana / Wanne / Tank

Cislo Sestavy	Ver.	Nazev sestavy
201.K101-145	0	VANA/TANK/WANNE

Poz.	Objednaci cislo	Ver.	Nazev polozky	Rozmer	Ks
1	30.K101-144	0	VANA / TANK / WANNE		1
2	90.005.55.014	0	SROUB 6HRANNY / 6 SIDED BOLT / SECHSKANTSCHRAUBE	SROUB M8X16	2
3	90.100.55.005	0	MATICE / NUT / MUTTER	MATICE _ M8	2
4	90.150.50.005	0	PODLOZKA / WASHER / UNTERLEGSCHEIBE	PODLOZKA 8,4	2
5	94.012.001	0	RUKOJET / HANDLE / GRIFF		1

Cislo Sestavy/Number of assembly/Nummer der Baugruppe; Verze (Ver.)/Version/Version; Nazev sestavy/Assembly title/Name der Baugruppe; Pozice (Poz.)/Position/Position; Objednaci cislo/Purchase order number/Bestellnummer; Nazev polozky/Volume title/Name der Position; Rozmer/Stock size/Abmessung

6.21. Rozvaděč / Verteiler / Distributor

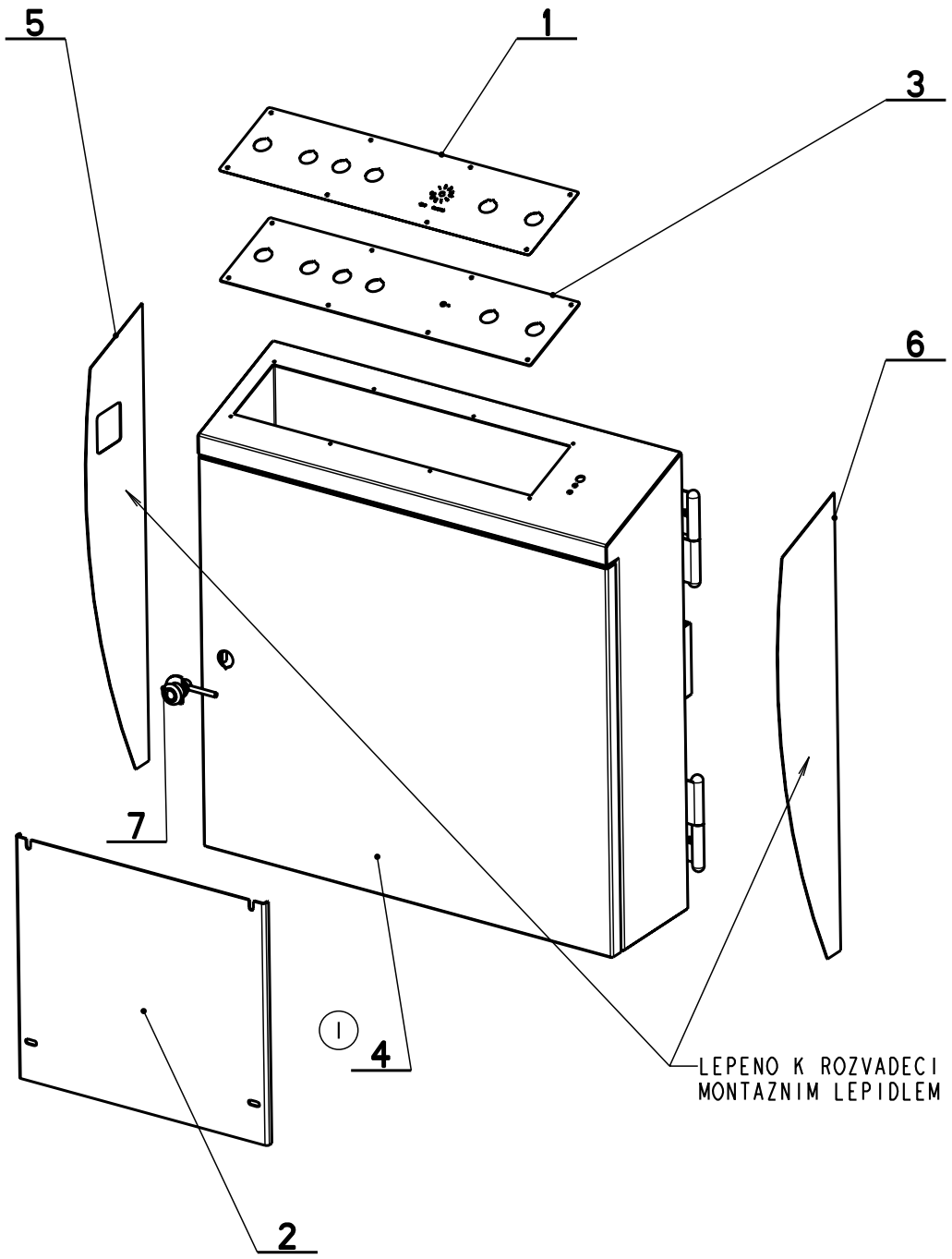

NAZEV SESTAVY	CISLO SESTAVY	STROJ
ROZVADEC	201.K101-220	AL400

Konstruoval:	TOK
Datum:	05. 02.2010
Meritko:	7:50

Cislo Sestavy	Ver.	Nazev sestavy
201.K101-220	2	ROZVADEC/DISTRIBUTOR/VERTEILER

Poz.	Objednaci cislo	Ver.	Nazev polozky	Rozmer	Ks
1	30.K101-206	3	OVLADACI PANEL / CONTROL PANEL / BEDIENPULT	P 0.5 x 123	1
2	30.K101-207	0	DESKA ELEKTRO / ELECTRIC BOARD / PLATINE	P2x340	1
3	30.K101-212	2	PANEL / PANEL / PANEL	P 1.5 x 123	1
4	30.K101-221	1	ROZVADEC / DISTRIBUTOR / VERTEILER		1
5	30.K101-231	0	PLECH / PLATE / BLECH	P 1-134	1
6	81.K101-230 (1)	0	PLECH / STICKER / AUFKLEBER	P 1-134	1
7	91.990.001	0	ZAMEK ROZVADECOVY / DISTRIBUTOR LOCK / VERTEILERSCHLOSS		1

1.ZRUS.ROZVADEC 31.K101-222 A NAHR.30.K101-221. 021/ZM032 5.2.2010 SLEZACKOVA

2.ZRUSEN PANT 30.K101-209,30.K101-208. 090/ZM162 31.5.2010 SLEZACKOVA

Cislo Sestavy/Number of assembly/Nummer der Baugruppe; Verze (Ver.)/Version/Version; Nazev sestavy/Assembly title/Name der Baugruppe; Pozice (Poz.)/Position/Position; Objednaci cislo/Purchase order number/Bestellnummer; Nazev polozky/Volume title/Name der Position; Rozmer/Stock size/Abmessung

6.23. Upínání horní / Spannvorrichtung oben / Top clamping

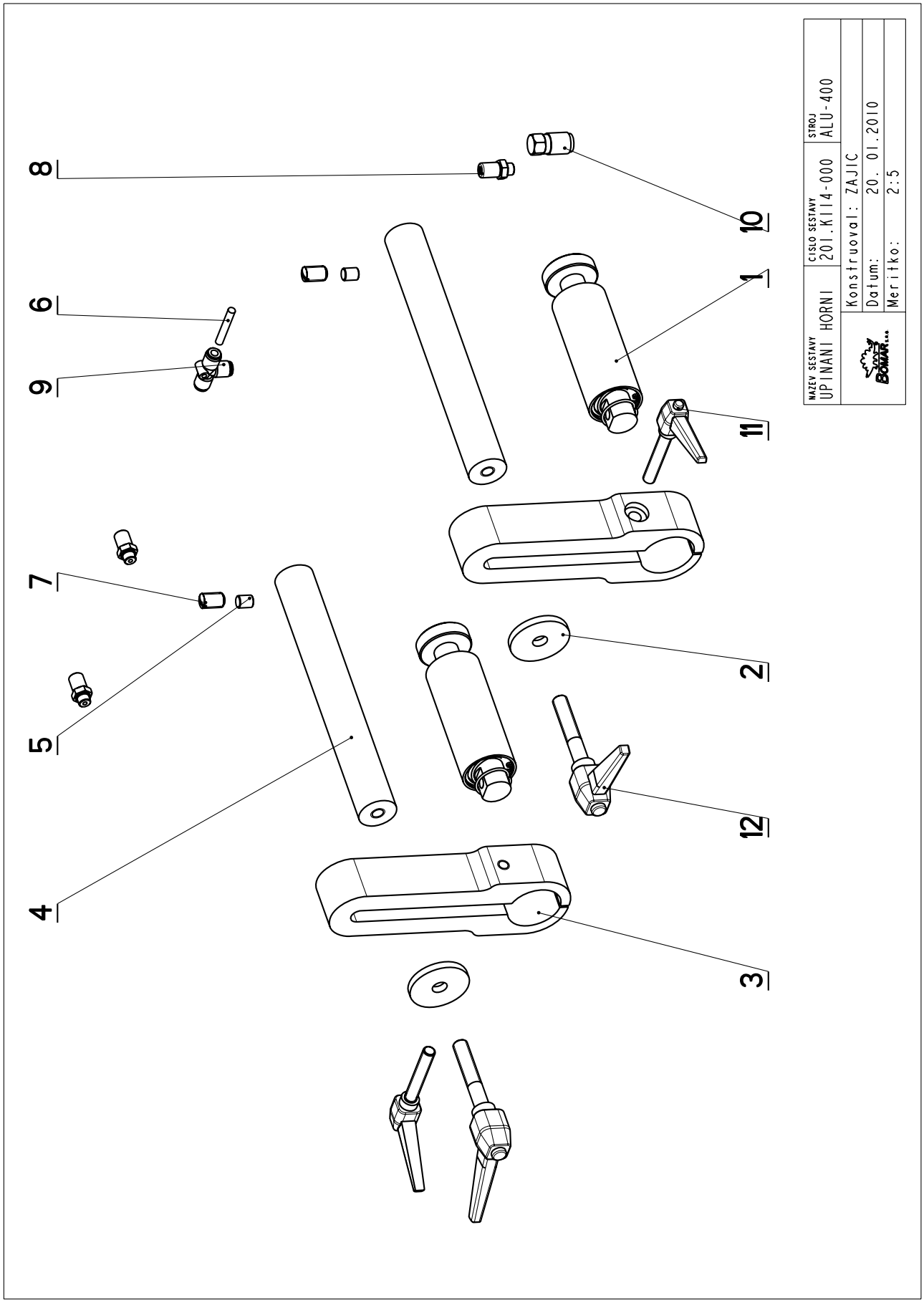

6.24. Kusovník / Stückliste / Piece list – Upínání horní / Spannvorrichtung oben / Top clamping

Cislo Sestavy	Ver.	Nazev sestavy
201.K114-000	1	UPINANI HORNI/TOP CLAM/SPANNVORRICHTUNG OBEN

Poz.	Objednaci cislo	Ver.	Nazev polozky	Rozmer	Ks
1	201.K107-200	0	VALEC UPINACI / FIXING CYLINDER / SPANNZYLINDER		2
2	30.0502-603	1	PODLOZKA / WASHER / UNTERLEGSCHEIBE	d50	2
3	30.K103-004	2	DRZAK / HOLDER / HALTER	ODLITEK	2
4	30.K103-019	0	TYC / POLE / STANGE	d 32	2
5	30.K103-022	0	VALECEK / CYLINDER / ROLLE	d 10	2
6	43.001.008	0	HADICE / HOSE / SCHLAUCH	PU6	1
7	90.002.20.018	0	SROUB STAVECI / ADJUSTMENT BOLT / STELLSCHRAUBE	SROUB M12X20	2
8	93.005.001	0	SROUBENI PRIME / DIRECT BOLTING / GERADE VERSCHRAUBUNG	G 1/8-6/4	3
9	93.011.002	0	PROPOJKA T / CONNECTION T / VERBINDUNGSSTÜCK T	6	1
10	93.023.001	0	SPOJKA / JOINT / KUPPLUNG	182-1/8"	1
11	94.008.006	0	PAKA UPINACI / ATTACHMENT LEVER / SPANNHEBEL	M10	2
12	94.008.012	0	PAKA UPINACI / ATTACHMENT LEVER / SPANNHEBEL	M12x70	2

6.25. Konzola / Konsole / Console

Cislo Sestavy
201.K102-050

Ver.
0

Nazev sestavy
KONZOLA/CONSOLE/KONSOLE

Poz.	Objednaci cislo	Ver.	Nazev polozky	Rozmer	Ks
1	30.K102-002	5	KONZOLA / CONSOLE / KONSOLE	ODLITEK	1
2	30.K102-025	1	POUZDRO / SLEEVE / BÜCHSE	d 36	2
3	30.K102-008	3	CEP / LUG / BOLZEN	d 32	1

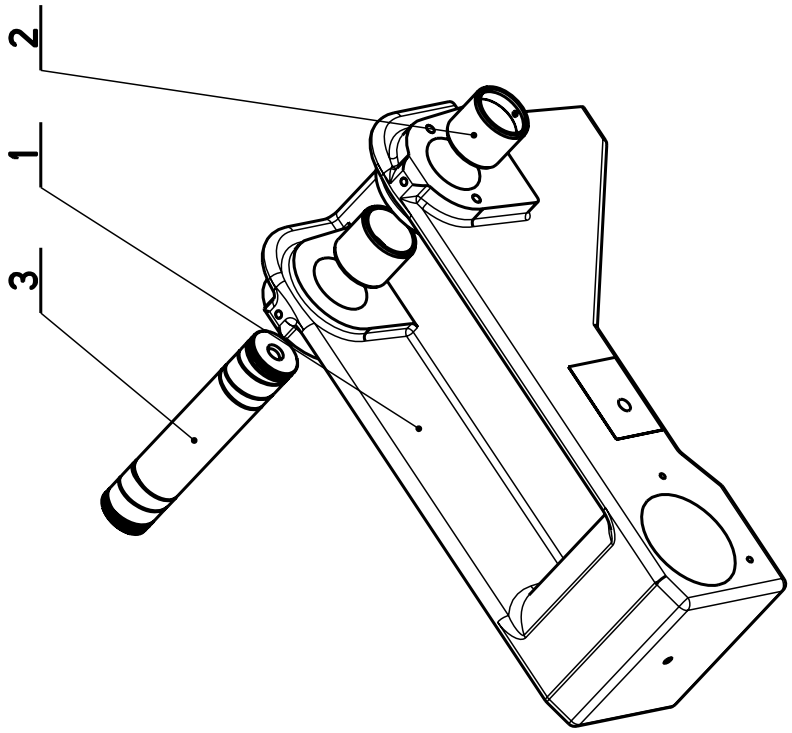

6.26. Klíč / Schlüssel / Key

Cislo Sestavy	Ver.	Nazev sestavy
201.K114-100	0	KLIC/KEY/SCHLÜSSEL

Poz.	Objednaci cislo	Ver.	Nazev polozky	Rozmer	Ks
1	30.K114-101	0	KLIC / KEY / SCHLÜSSEL		1
2	30.K114-102		TYC / POLE / STANGE	d 12	1
3	30.K114-104	0	KLIC / KEY / SCHLÜSSEL	P4x80	1

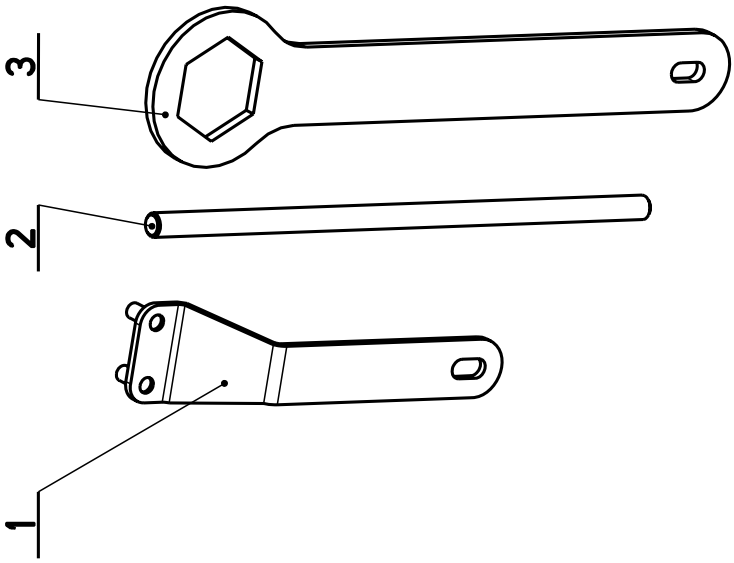

Cislo Sestavy/Number of assembly/Nummer der Baugruppe; Verze (Ver.)/Version/Version; Nazev sestavy/Assembly title/Name der Baugruppe; Pozice (Poz.)/Position/Position;
Objednaci cislo/Purchase order number/Bestellnummer; Nazev polozky/Volume title/Name der Position; Rozmer/Stock size/Abmessung

6.27. Díl připojovací /Anschlussteil / Attachment part

Cislo Sestavy	Ver.	Nazev sestavy
201.K114-200	0	DIL PRIPOJOVACI/ATTACHMENT PART/ANSCHLUSSTEIL
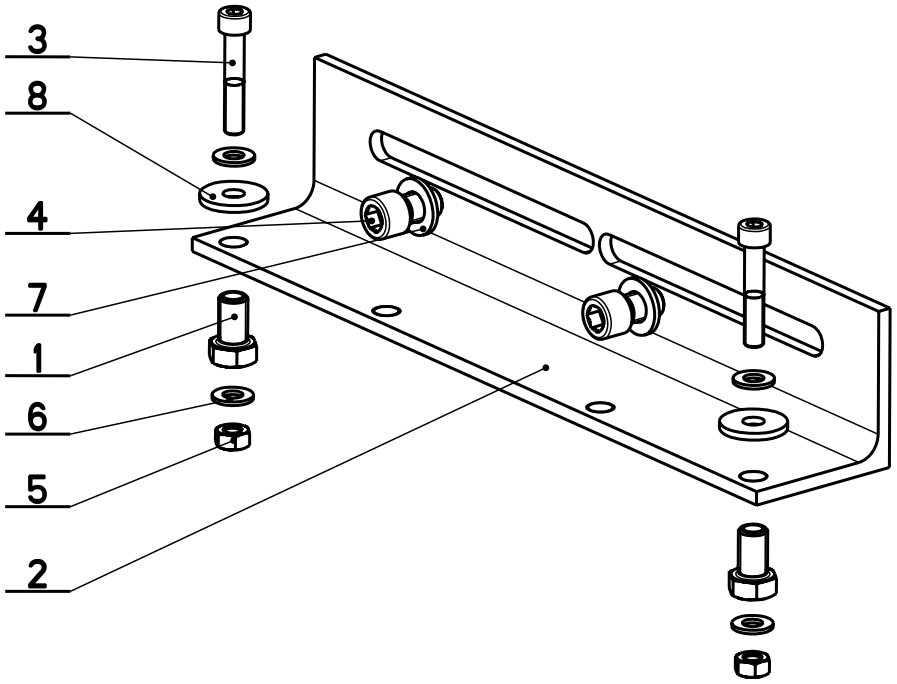
Poz.	Objednaci cislo	Ver.	Nazev polozky	Rozmer	Ks
1	30.K103-027	0	SROUB / BOLT / SCHRAUBE	SROUB 12x20	2
2	30.K114-210	0	PROFIL L / PROFILE L / PROFIL L	L 70x70x6	1
3	90.001.25.037	0	SROUB IMBUS / ALLEN HEAD BOLT / IMBUSSCHRAUBE	M8X45	2
4	90.001.25.056	0	SROUB IMBUS / ALLEN HEAD BOLT / IMBUSSCHRAUBE	M12x20	2
5	90.100.55.005	0	MATICE / NUT / MUTTER	MATICE _ M8	2
6	90.150.50.005	0	PODLOZKA / WASHER / UNTERLEGSCHEIBE	PODLOZKA 8,4	4
7	90.150.50.007	0	PODLOZKA / WASHER / UNTERLEGSCHEIBE	PODLOZKA 13	2
8	90.151.50.005	0	PODLOZKA / WASHER / UNTERLEGSCHEIBE	PODLOZKA 8	2